TRANSPORT AND TELECOMMUNICATION INSTITUTE

Takhir Mamirov

THE DEVELOPMENT OF PROBLEMS RESOLUTION METHODS OF PRECISE VIBRODIAGNOSTICS OF TRANSPORT AGGREGATES

SUMMARY OF THE DOCTORAL THESIS

RIGA - 2011

TRANSPORT AND TELECOMMUNICATION INSTITUTE

Takhir Mamirov

THE DEVELOPMENT OF PROBLEMS RESOLUTION METHODS OF PRECISE VIBRODIAGNOSTICS OF TRANSPORT AGGREGATES

AUTHOR'S SUMMARY OF THE DOCTORAL THESIS

to obtain the scientific degree
Doctor of Science in Engineering (Dr.sc.ing)

Scientific area "Transport"
Scientific subarea "Transport and Logistics"

Scientific Supervisor:
Dr.habil.sc.ing, professor
Vitaly P. Yeremeyev

Consultants:
Dr.habil.sc.ing. professor
Igor V. Kabashkin

RIGA - 2011

UDK 629.3.001.4
M 23

Transport and Telecommunication Institute

T. Mamirov
M 23 The Development of Problems Resolution Methods of Precise Vibrodiagnostics of Transport Aggregates. Author's Summary of the Doctoral Thesis. Riga: Transport and Telecommunication Institute, 2011. 55 p.

ISBN 978-9984-818-43-6

DOCTORAL THESIS IS PRESENTED AT THE TRANSPORT AND TELECOMMUNICATION INSTITUTE TO OBTAIN THE SCIENTIFIC DEGREE OF DOCTOR OF SCIENCE IN ENGINEERING (Dr.sc.ing.)

OFFICIAL REVIEWERS:

Dr.sc.ing., professor Alexander Grakovski,
Transport and Telecommunication Institute, Latvia

Dr.sc.ing., professor Dalius Navakauskas,
Vilnius Gediminas Technical University, Lietuva

Dr.sc.ing., network administrator, engineer Igor Radchenko,
AS "Latvenergo", Latvia

The defence of the doctoral thesis will be held at the special Promotion Council of Transport and Telecommunication Institute on the 8th of September, 2011 at 16:00: 1, Lomonosova Street, room 4-130, Riga, Latvia, phone (+371) 67100617, fax (+371) 67100535.

CONFIRMATION

I hereby confirm that I have written the doctoral thesis presented to the Transport and Telecommunication Institute to obtain the scientific degree of Doctor of Science in Engineering. The doctoral thesis has never been presented to any other promotional council to obtain the scientific degree.

_____ 2011. T. Mamirov

The doctoral thesis consists of Introduction, 5 Chapters, 32 sub-chapters, Conclusion and 2 Appendices. It includes 87 expressions, 62 figures, 10 tables, constituting 148 pages in total. The references list comprises 110 sources.

ABSTRACT

The doctoral thesis "The Development of Problems Resolution Methods of Precise Vibrodiagnostics of Transport Aggregates" is written by Takhir Takhirzhanovich Mamirov, under the supervision of Dr.habil.sc.ing, professor Vitaly Yeremeyev.

The work presents the results of the research dedicated to solving the current problems of precise vibrodiagnostics of transport aggregates. The research was carried out during the period from 2004 to 2011. The key tasks are identified and the need for their resolution is substantiated.

To improve the quality and validity of transport aggregates vibrodiagnostics it is suggested to use the proposed methods of high-quality narrow-band filtration. These methods are based on the synthesis of special structures of digital filters as well as on algorithms development for its best program realization.

The work demonstrates the principled possibility of realization of robust digital filters on the first-order substructures, so-called "bilines". The minimally possible realizable passbands of such filters are investigated. The advantages and disadvantages of the new digital structures are analyzed. The comparative analysis of frequency characteristics of biline and traditional structures is executed.

The condition of physical realizability of two-channel phase filters is found, and the principled possibility of realization of robust digital filters on phase first-order substructures is shown. The modeling of the synthesized structures in real time is conducted.

A new method for the synthesis of computational-effective polynomial biline digital filters is proposed. The range of application of such filters is limited to rather narrow bands; however the computational complexity of such filters is at least twice lower than that of the biline realizations of general configuration.

The possibility of the synthesis of the phase bilines with the minimal number of real multiplications is demonstrated. The method for the synthesis of the passband and stopband structures which does not use the traditional band frequency transformation is proposed. The central frequency of such digital filters is controlled by a multiplier, identical in all of the bilines.

The new technique to identify the parameters of recursive systems is proposed. It is based on the synthesis of special input finite test influences at which the reaction of the projected filter has a strictly limited duration. The corresponding statement is formulated and proved. The new method of quality check of synthesis of the recursive narrow-band systems, based on the estimation of a deviation degree of the real impulse characteristic of the system from the ideal one, is described. The problem of selection of necessary duration of the impulse characteristic and its admissible deviation from the ideal characteristic is discussed.

CONTENTS

1. IMPORTANCE OF THE RESEARCH **1**

2. REVIEW OF THE EXISTING RESEARCH **1**

3. OBJECT AND SUBJECT OF THE RESEARCH **3**

4. OBJECTIVES AND TASKS OF THE RESEARCH **4**

5. METHODOLOGIES AND DEVELOPMENT TOOLS **4**

6. SCIENTIFIC NOVELTY OF THE RESEARCH **5**

7. PRACTICAL VALUE OF THE RESEARCH AND ITS IMPLEMENTATION **5**

8. APPROBATION OF THE RESEARCH **6**

9. PUBLICATIONS **6**

10. STRUCTURE OF THE THESIS **7**

11. DESCRIPTION OF THE PRINCIPAL RESULTS OF THE RESEARCH **8**

11.1 Diagnostics as a Component of Safety Process Support on Transport 8
11.2 Development of the Base Substructure - Biline 14
11.3 Synthesis of Polynomial Filters on Computational-Effective Bilines 23
11.4 Optimization of the Filter Structure on Bilines 29
11.5 Realization of Digital Filters Smoothly Operated on the Central Frequency 35
11.6 Linearization of the Transfer Function of Biquad Filter with Complex Multipliers 36
11.7 Synthesis of Duo-Channel Filtering Systems on Phase Units 38
11.8 Identification of Discrete IIR-Systems Parameters 44
11.9 Verification of Discrete IIR-Systems Characteristics 46
11.10 Practical Application of the Research Results in the Vibrodiagnostic Process on the Railway 48

CONCLUSIONS **52**

LIST OF THE AUTHOR'S PUBLISHED PAPERS **54**

1. IMPORTANCE OF THE RESEARCH

The methods of precise and reliable vibrodiagnostics of transport vehicles aggregates are still insufficiently developed, and, more often, completely absent, regardless the fact that there exists the acute need for such methods. Therefore, the object of this research is the process of vibrodiagnostics of transport vehicles and systems, and the subject of this research is the set of systems and methods of vibrodiagnostics of transport vehicles and systems. In its turn, the objective of the research is to improve the quality and reliability of the vibrodiagnostics of transport aggregates by developing effective structures and efficient methods of narrow-band and/or high-selective digital filtration given strict requirements to their frequency characteristics.

One of the central problems of the modern digital signal processing is achieving high-quality narrow-band filtration. Along with the strict requirements to the quality of such filtration there are completely unresolved problems of synthesis of the devices allowing realization of the required high-quality thin signals processing. The important properties that such systems should possess include large dynamic range, mobility and - most importantly – a weak dependence of their frequency and time responses on the word length of the machine arithmetic being used.

However, the existing types of realizations do not completely facilitate qualitative narrow-band signal processing. The minimum realizable passband widths of such digital filters are limited to an order of 10^{-6} of normalized frequency, while there exists the need for more narrow-band filtration. Structural redundancy, impossibility of realization of stable filters of high orders (even at modeling on a platform with high word length of machine arithmetic), weak unification of current realizations - all this forces to search for more suitable methods and tools of synthesis of structures that would meet the increasingly strict requirements.

Moreover, some of the most recent publications claim that it is impossible to design super narrow-band filters using the units simpler than biquad cells. In other words, they define the existing restrictions of frequency band selection. Below we will discuss the methods of synthesis of transfer functions and corresponding structures that allow to bypass these restrictions and to prove the possibility of designing super narrow-band high-selective passband and stopband filtering systems.

2. REVIEW OF THE EXISTING RESEARCH

The quality improvement of the vibrodiagnostics of transport aggregates and units is a multidimensional problem; the present research tackles the following aspects of it:

1. Development of cheap and high-performance spectrum analyzers with a wide set of capabilities;
2. Development of fast and effective methods and tools of precise vibration signal's analysis;
3. Development of corresponding effective decision-making systems;
4. Training of staff.

In the field of development of intellectual systems for machine monitoring and diagnostics by vibration the works of the Russian scientists Barkov A.V. and Barkova N.A. deserve a special mention. In their research they consider the basic requirements to modern tools for condition monitoring and diagnostics of machines and equipment, as well as the selection of vibrodiagnostics attributes of defects of machine aggregates. The authors provide a thorough analysis of the reasons for the occurrence of undesirable vibrations; consider various kinds of mechanical defects and the reasons for their occurrence. The authors also contribute considerably to solving the problems of vibrodiagnostics of low-revolutions bearings that are used, for example, in the wheel axle boxes of railway carriages, in a number of machines of iron and steel industry, etc. In collaboration with Fedorishchev V.V., the authors consider in more detail the questions of vibration monitoring and diagnostics of wheel-reduction gear and wheel-motor blocks on railway transport. The main provisions and conclusions are supplemented with real-life examples and analysis of extraordinary situations that the authors faced while developing monitoring and diagnostics systems, which are used on enterprises of eleven industries of Russia and other countries, training vibration diagnostics experts and providing technical user support over the last ten years.

The analysis of special characteristics of the equipment used in the diagnostics of bearings of wheel-motor blocks is considered in the papers of Tulugurov V.V., Degterev S.G. The authors analyze the amendments that should be made to the existing technologies of diagnostics in order to achieve high reliability of results. Authors note that the new generation diagnostics systems that are currently being introduced on Northern Railway[1] have been improved in order to reduce the probability of overlooking dangerous defects. In particular, the frequency resolution of the spectral analysis of signals has been increased and the possibility to use new methods of diagnostics has been added.

In the paper “Practice of vibration diagnostics of a rolling stock in OJSC Russian Railway” by Azovtsev A.J., Barkova N.A., Degterev S.G., the authors consider the problems associated with the adaptation of the existing methods and tools of vibration diagnostics to the practical tasks of control and condition forecast of wheel-motor blocks and wheel-reductor pairs of locomotives, ways of solving such problems, as well as the major directions of development of other methods of deep diagnostics of the rolling stocks. The authors analyze cases of incorrect identification of mechanical defects arising in bearing units of WMB, and provide the qualitative definition of the degree of difference between the vibrational information introduced by a defect and the vibrational information introduced by the natural rotation of a bearing. According to the authors, in order to improve the reliability of the diagnostic process in railway depots the qualified diagnostics experts should regularly control the execution of the regulated works, and also evaluate the preventive and diagnostic situations randomly chosen from the registration base of all defects.

[1] **Northern Railway** (branch of open joint-stock company «Russian Railways») — railway located on the north and north-east of European part of Russian Federation.

It is necessary to especially note the invaluable help of Yakobson P.P., the researcher of VAST[2] association (Russia), who has kindly provided the author of this paper with the set of vibration signals received from the sensors used in diagnostics of WMB axle boxes. In his review[3] Yakobson P.P. notes that close values of rotation frequencies of different cascades of the gas-turbine installation under research, and also a considerable number of stages with different numbers of blades causes a high number of combinational and blade vibration components in the entire range of frequencies, which considerably complicates diagnostication and algorithm automation. Therefore, designing an inexpensive and efficient multichannel diagnostic system that allows to quickly and qualitatively divide a frequency range is an important and immediate problem.

Research on various cases of occurrence of undesirable vibration is also conducted in the laboratory of Groenpol Vibration Consultancy in the Netherlands. Case studies are conducted also with the use of spectral technologies. The company's services are usually called for when a defect is quite developed and the vibrations are relatively expressed, and it is necessary to establish the reason of the defect without disassembling the aggregate completely. Using the spectral analysis, experts of the company localize defects by the presence of the spectral component of significant power. At the same time the insufficient attention is given to ill-defined defects, which cannot be identified by means of the existing methods of narrow-band selection.

Highly appreciating the level of the aforementioned works, at the same time it is necessary to point out that from the perspective of the theme of the current paper they do not provide the solution for many problems that arise in the process of vibrodiagnostics of transport aggregates. A number of the research projects conducted in the diagnostic centers, scientific laboratories and universities are partially dedicated to the questions of frequency processing of vibrodiagnostics signals. However, there have been no comprehensive studies focusing on the development of methods of precise frequency selection as applicable to the processing of the vibration data. Based on the abovementioned, it is possible to claim that the problem addressed in the present work has been formulated for solution for the first time.

3. OBJECT AND SUBJECT OF THE RESEARCH

The ***Object*** of the research is the process of vibrodiagnostics of transport vehicles and aggregates. The ***Subject*** of the research is the set of systems of vibrodiagnostics of units and aggregates of transport vehicles and systems.

[2] **VAST** – Vibro-Acoustic Systems and Technologies

[3] Yakobson P.P. "Peculiarities of vibration diagnostics of gas-turbine installations", VAST Association, Russia, 2003.

4. OBJECTIVE AND TASKS OF THE RESEARCH

The ***objective*** of the research is to improve the quality and reliability of the vibrodiagnostics of transport aggregates by developing effective structures and efficient methods of narrow-band and/or high-selective digital filtration given strict requirements to their frequency characteristics.

In accordance with the above objective, the following ***tasks*** have been identified and solved:

1. Analysis of characteristics of the existing methods of vibrodiagnostics of transport vehicles aggregates and units;
2. Analysis and properties of the existing methods of narrowband and/or high selective filtration;
3. Definition of a universal first-order structural element – biline;
4. Synthesis of computational-effective bilines;
5. Synthesis of computational-effective structures on bilines with special frequency transformation;
6. Synthesis of passband and stopband digital filters smoothly tunable by central frequency, which are tuned by the same constant with the help of some multiplications;
7. Synthesis of duo-channel narrowband and/or high-selective filters on phase units;
8. Formulating and proving the statement about fast identification of parameters of super narrow-band and/or high-selective systems;
9. Development of a special method of narrow-band systems verification.

5. METHODOLOGIES AND DEVELOPMENT TOOLS

For the analysis of characteristics of traditional and new synthesized realizations of digital filters, as well as modeling of synthesized structures in real time the *Matlab 7.0 R14, Matlab 7.7 R2008b* environment with the following tools has been used:

Matlab Toolboxes:

- Optimization Toolbox
- Signal Processing Toolbox
- Communications Toolbox
- System Identification Toolbox
- Filter Design Toolbox

Simulink:

- Fixed-Point Blockset
- DSP Blockset

6. SCIENTIFIC NOVELTY OF THE RESEARCH

This work is a comprehensive study of the problems of development of precise systems for vibrodiagnostics of aggregates and units of transport vehicles. The results of the research are as follows:

1. In order to improve the quality and validity of vibration analysis of different aggregates of transport vehicles and systems the new structures of high-selective narrow-band digital filters, as well as methods of their rational synthesis are suggested;
2. The universal structural element – biline – is suggested for synthesis of high-selective and/or narrow-band discrete systems;
3. It has been shown that for the realization of specified transfer function on bilines the arithmetic systems with lowest precisions are required;
4. The method for synthesis of narrow-band and high-selective filters on bilines with the lowest number of elements is suggested;
5. The new method of synthesis of tunable narrow-band filters with minimized number of elementary computations per sample is shown;
6. The method of calculation of special test influences for effective identification of recursive discrete systems (including narrow-band systems) is offered;
7. The new method of determination of frequency characteristics of synthesized narrow-band filters by results of their modeling in real time is suggested.

7. PRACTICAL VALUE OF THE RESEARCH AND ITS IMPLEMENTATION

The practical value of the research lies in the designing and potentially employing the new filtration systems at the pre-processing stage of vibrodiagnostics system.

The obtained results may present the practical value in the following directions:

1. Application of the biline filters in the systems of channel compressions of frequency communications for minimization of mutual interference of adjacent channels and increasing their number;
2. Implementation of exploitation control and high-precision analysis of dynamic systems of different technical systems, including road and air transport;
3. Increasing the precision of tracking and prediction of trajectories or trends in GPS systems for marine, air and road navigation;
4. Application of the biline filters for the development of spectrum analysis devices with high resolution in hydro- and echo-location systems, which will enable a detailed research of the complex seismic and hydroacoustic fields;
5. Using filters on bilines will allow to successfully modify the medical equipment to allow for a more precise diagnostic screening of patients;

6. Possibility to develop the high-precision systems for spectrum analysis of different chemical components and alloys, for example, for estimation of degree of engine wear by the characteristics of machine oil, or for estimation of water level in aviation fuel.

Besides, the set of machine programs for synthesis and analysis of new structures, and also for real-time modeling is developed. Currently the obtained results are undergoing approbation via the creation of the set of dynamic link libraries using C++ and its application in the area of chemical spectrum analysis.

8. APPROBATION OF THE RESEARCH

The scientific results obtained through this research were presented at nine scientific and research and practice conferences in Latvia and Lithuania, including:

- The 11th International Conference of ELECTRONICS (Kaunas, May 2007);
- The International Conference "Reliability and Statistics in Transportation and Communication" (RelStat, Riga, 2002-2006, 2010);
- The International Conference "Innovative Vocational Education and Training in Transport Area" (IVETTA, Riga, 2005);
- The Baltic Cooperation Conference (IEEE, Riga, 2007).

The author's work in the field of development of precision systems of filtration has received the Karlis Irbitis award (the research grant) from the Latvian Academy of Sciences, JSC „Latvijas Gaisa Satiksme" and the Latvian education fund „Izglītībai, zinātnei un kultūrai" for the research "Synthesis of High-Selective Phase Filters", 2003.

9. PUBLICATIONS

18 papers [1-18] have been published based on the results of the research. The sources include 11 scientific papers and 7 brief outlines of the scientific reports. They consider the problems of the narrow-band and high-selective filtration as well as tasks related to the projecting and development of the corresponding systems. The special attention is given to the projecting of the robust filtering systems, which dynamic characteristics are at least equal or, sometimes, better than existing ones. The particular attention is paid to the problems of development of high-performance and cheap systems, the use of which in the vibration diagnostics systems is pretty urgent.

10. STRUCTURE OF THE THESIS

The doctoral thesis consists of Introduction, 5 Chapters, 32 sub-chapters, Conclusion and 2 Appendices. It includes 87 expressions, 62 figures, 9 tables, constituting 148 pages in total. The references list comprises 110 sources.

Introduction considers the importance of the thesis, formulates the goal and the tasks of the research. The novelty and the practical value of the obtained results are shown in combination with the brief executive summary of the work.

Chapter 1 considers some prime directions of the transport development in XXI century, formulates the corresponding purposes and problems, and identifies the methods and tools for their solution. In particular, such important aspects, as the safety and efficiency of transport operation are considered. The major factors that influence the compliance with the safety criteria of functioning of various vehicles, units or aggregates are defined; in particular, the diagnostics measures and tools of such objects are identified. The analysis of the existing methods and tools of transport vibrodiagnostics is performed, and, accordingly, the set of problems arising at their technical realization and practical application is revealed.

In *Chapter 2* the modern algorithms and variants of realizations of the narrow-band filtration are considered. The analysis of characteristics of existing solutions is performed, and also the restrictions of their functional possibilities during the practical implementation are revealed. To overcome the existing restrictions it is offered to use a set of special first-order structures – bilines, which possess improved robustness and commonality. Essentially new variants of similar structures are offered for the purpose of their simplification and increase in performance of the entire filtering system. The analysis of dynamic characteristics of new structures, and also their comparison with characteristics of known realizations of previous generation is carried out.

In *Chapter 3* some different variants of realizations of filtering systems on bilines are provided; their frequency characteristics are shown and analyzed. Some edge case of practical application of the synthesized filters in the vibrodiagnostics systems of transport vehicles is discussed. The problems of parameters identification of synthesized narrow-band and high-selective systems, and also their frequency characteristics verification are considered.

In *Chapter 4* the question of performance increase of developed filtering systems on bilines for the purpose of decreasing of time required for decision-making in the diagnostics process is considered. In particular, the possibilities of synthesis of duo-channel filtering systems on phase units are shown.

Chapter 5 demonstrates the analysis of frequency characteristics of vibration signals, received from the sensors of the railway axle boxes. The results of narrow-band pre-processing of signals in comparison with limitation of modern techniques are given.

11. DESCRIPTION OF THE PRINCIPAL RESULTS OF THE RESEARCH

11.1 Diagnostics as a Component of Safety Process Support on Transport

One of the priority directions of transport development in the XXI century is the increase of safety and efficiency of its operation, improvement of transport services quality as well as the maintenance of all transport infrastructure with high-quality, fast mobile communication. In this connection within the framework of the European Union Telematics Applications Programme (TAP, 1994-1998) of 4th Framework, and also within the 5th Framework Programme (1998-2002) the following areas in transport sector of the program had been defined (Fig. 1):

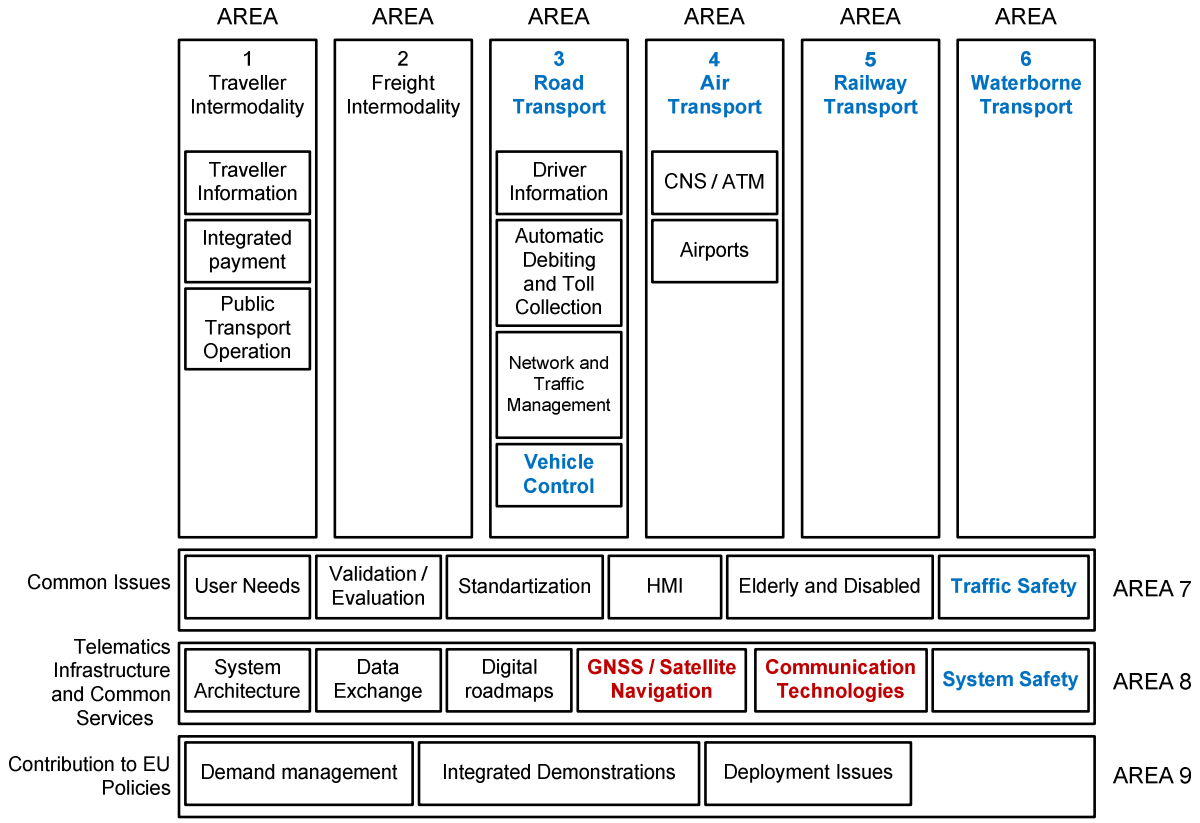

Fig. 1. *Concertation Areas in the TAP-Transport sector*

Achievement of the purposes and the resolution of TAP-projects problems of corresponding areas, in particular, adherence to the criteria of functioning safety of various vehicles and their units (*Traffic Safety, area 7; System Safety, area 8*) is impossible without the ***creation and improvement of modern tools and methods of a quality monitoring and technical diagnostics of various transport objects (Fig. 2).***

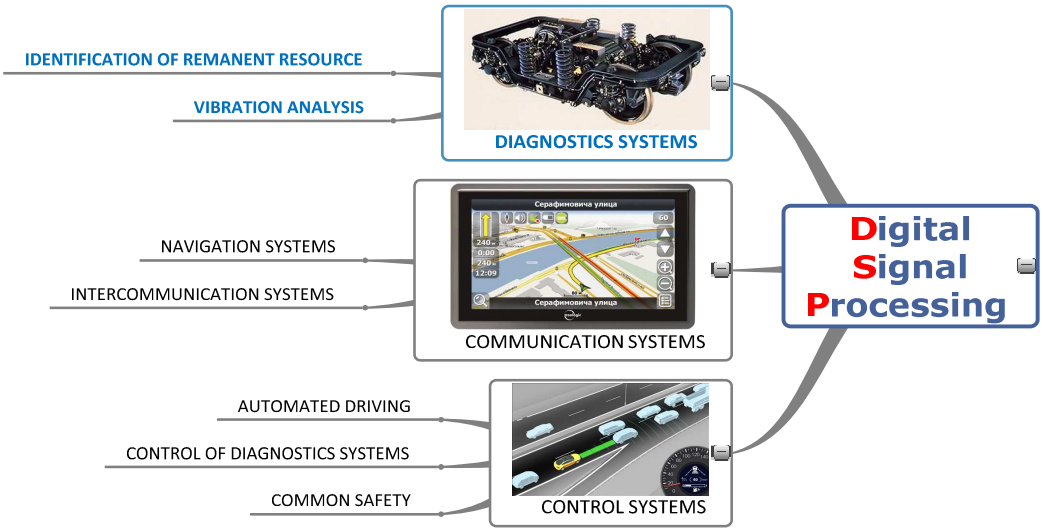

Fig. 2. *The systems providing full-fledged functioning of a vehicle in a transport infrastructure*

From the point of view of the organizational approach it is possible to allocate the ***measures of implementation*** and ***tools of technical diagnostics*** of transport vehicles. Thus, the measures of diagnostics implementation are understood as a certain mode of actions on achievement of the necessary purpose, and the diagnostic aids are understood as a programmatically-technical toolkit for realization of the specified actions.

The measures can be conditionally subdivided into following kinds:

- **organizational** - development of methodical and organizational-technical documentation, that define uniform principles of a technical policy in the field of maintenance service and metrological maintenance of technical diagnostics tools of transport objects at diagnostic stations; in particular, definition of the service schedule and control over a condition of vehicles aggregates;
- **technical** - designing, testing and verification of diagnostic tools and systems; realization of control and diagnostics processes of a unit without interruption of its regular functioning; exclusion of a unit from the functioning system for more detailed diagnostics, repair or replacement.

Respectively, the *diagnostics tools and methods* can be split into the following kinds:

- **visual diagnostics** – detection of visible malfunctions, damages, cracks, smudges of technical liquids;
- **programmatically-technical diagnostics** - designing and realization of vibrating sensors and vibrometers, development of the software for interaction of sensors with supervisory consoles; development of tools and methods for realization of intellectual contactless sensors and vibrometers.

The methods of *hardware-software diagnostics* are shared into two basic groups:

- **methods of test diagnostics**, which require formations of the artificial disturbances influencing object of diagnostics;
- **methods of functional (working) diagnostics**, which are firstly used for the machines, which are the sources of natural disturbances in the work process.

Let us consider the informational technologies, which are used for functional diagnostics:

- **power technology** – the simplest technology based on measurement of power or amplitude of a controllable signal;
- **frequency technology** – the technology which assumes a frequency filtration of the measured signal and the further analysis of selected components;
- **phase-time technology** - it is based on comparison of the form of the signals measured through fixed intervals of time;
- **spectrum technology** – the technology is based on the narrow-band spectral analysis of signals, which allows implementing the comparison of the signal form with the standard form.

Vibrodiagnostics, being a section of hardware-software diagnostics, is the branch of knowledge including the theory and methods of the processes organization of definition of technical condition of machines and units by the information, which is concluded in vibration signal. The last one is the basic physical data carrier about the oscillatory processes occurring in diagnosed object, and also about noise processes of environment. Modern methods of vibrodiagnostics can use the following hardware-software tools: percussive element (hammer) for generating of internal vibrating oscillations of various power; seismometer; acceleration gage (has high frequency of own fluctuations); multichannel measuring-transforming equipment, including amplifiers, integrators, ADT, filters; multichannel recording magnetometer for record of vibrating signals; computer for processing of vibration signal, analyzing and visualization of the received information.

Let us show the example of the vibration signals, received from the vibration sensors, settled on the wheel-motor blocks or wheel-reductor blocks. The set of the real vibration signals, used in research, were kindly provided by the main engineers of the VAST Company, above mentioned. The time-domain and frequency-domain examples are shown on Fig. 3 and Fig. 4.

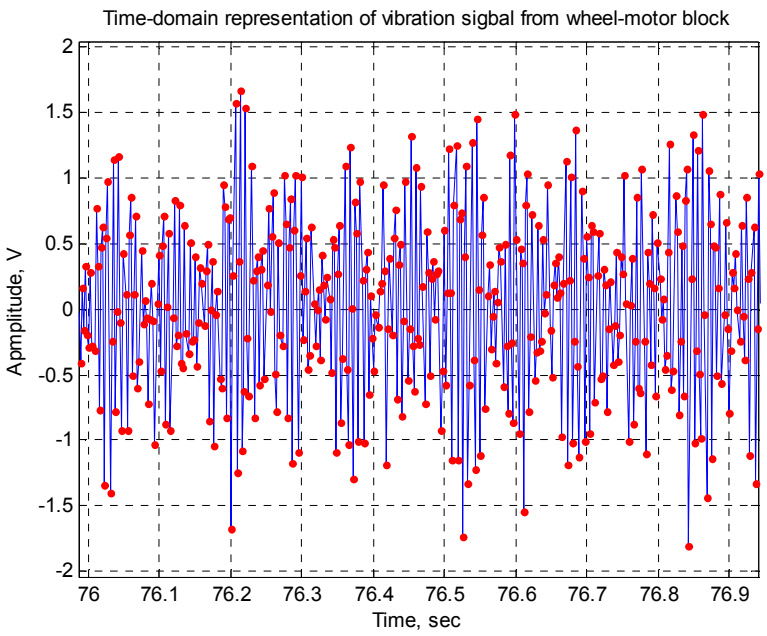

Fig. 3. *Example of the real vibration signal, which describes the functioning of the wheel-motor block*

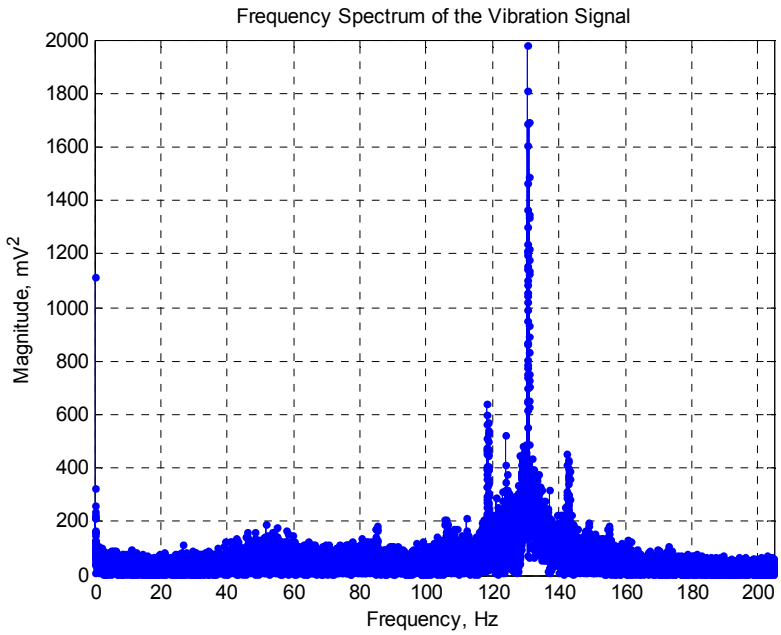

Fig. 4. *Frequency spectrum of the real vibration signals*

Currently during vibrodiagnostics of different machine objects the most actual is the solution of the following ***tasks***:

1. *Selection* of the information incoming to the diagnostic sensor from the investigated object in the form of an analog signal;
2. *Division* of the same type information, coming to the vibration sensor from some near objects of the same kind;
3. *Identification* of a defect after successful allocation of the necessary information received from the sensor;

4. The *analysis* of the information about defect. The degree of a condition's criticality of the diagnosed unit is defined; if it is necessary, the schedule of planned withdrawal of the unit for its preventive maintenance, partial or full replacement is corrected.

The complexity and specificity of the considered problems depends on a class of diagnosed object, the reasons of occurrence of defects and their kinds, and also character of the analyzed information received from various sensors. The reasons and types of the vibration changes, which lead to the different changes of the frequency characteristics of bearings, are in details considered by author in research.

The overwhelming majority of modern systems of communication, control and diagnostics of transport objects are implemented with use of ***digital signal processing*** (DSP). It is necessary to notice that the analysis of signals both in time and frequency areas is put in the arsenal of the mentioned systems. Frequency analysis represents the widely known ***spectral analysis***, which the quality execution of requirements of the final customer depends on. There are two types of realization of algorithms of spectrum analysis: hardware (spectrum analyzers) and software.

In advance to define the moment of the beginning of an imbalance occurrence in the system, and also conditions accompanying to it for the further more exact identification of a reason of defect, the analysis of dynamic characteristics of the above mentioned systems is desirable for spending in real time. In this connection the development of methods of synthesis ***of high-performance robust systems*** of signals processing, which realization can be compact and at the same time possess the improved characteristics in comparison with already existing systems, is sharply actual.

In early works about methods of diagnostics of a technical condition of the machine equipment [Grushin B.] the alternative methods of increase of diagnostics reliability, in particular, the autoregression model (AR-model) of vibration process of vibrations, and also a method of the whitewashing filter (WFM) are considered. The idea of the last one consists in the minimization of the following functional:

$$H_\nu(X): \frac{1}{\sigma_r^2} \int_{-F}^{F} G_X(f) K_r^{-2} df \Big|_{r=\nu} \to \min, \tag{1}$$

where $G_\nu(f)$ is a competitive estimate, K_r is a covariance matrix, σ_r^2 - dispersion of the generative process. The structural scheme of the part of the diagnostics process, based on WFM, is shown on Fig. 5; the components are whitewashing filter and N-channel threshold estimation system. After whitewashing filter the frequency spectrum is divided by passband filters into N channels; the estimation of the dispersion of the stochastic process (noise signal) is occurred in each channel. After estimation passed the threshold system, the resolving unit produces a solution about existence of any kind of diagnosed failure.

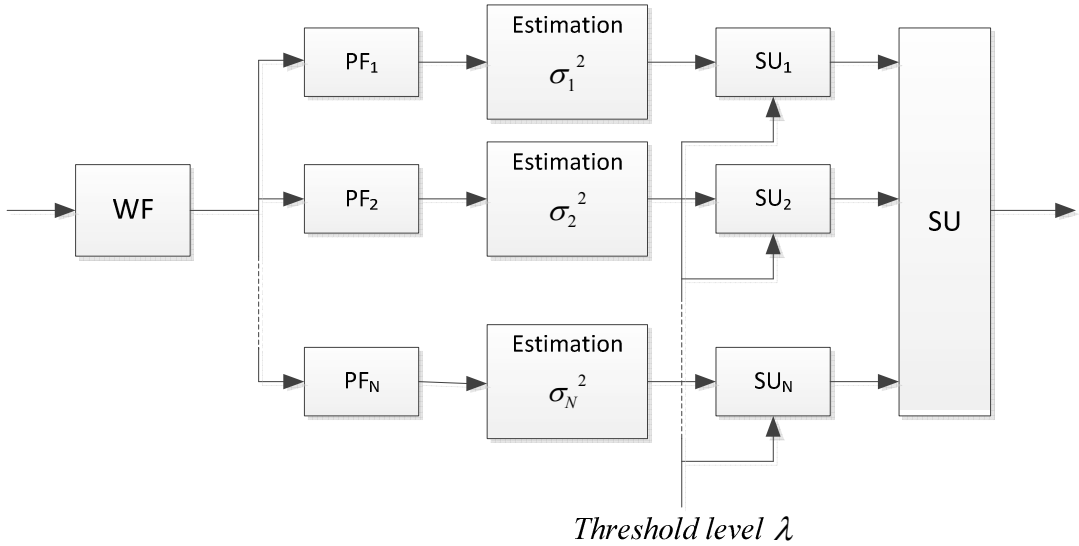

Fig. 5. *The structural scheme of whitening filter method*

On the picture above the WF is the whitewashing filter, PF is a passband filter, and SU is a solving unit.

It is simple to notice that WMF uses the beforehand known, definite range of frequencies [–F…F], where the functional minimization is carried out. In connection with this it is possible to allocate the following features of a method:

1. If the investigated frequency band is relatively narrow, there is a problem of ***selecting*** of the signal from the given band for its further processing. The difficult spectrum of the analyzed signal assumes increasing of the number of channels and, accordingly, reducing of the passband widths of each passband filter in the channels.
2. If two or more maintained units of one diagnosed aggregate generate vibrational oscillations in the same frequency band, or in the enough near frequency bands, there is a problem of ***separation*** of corresponding spectrums for their future processing.

The methods of nondestructive vibrodiagnostics, based on application of a method of eigen frequencies, described, for example, in work “Development of a technique and system of diagnostics of axes and wheels of railway carriages using method of eigen frequencies with application of tared emitter [Desyatnikov V.E.] are also known. The author of that work analyzes the problems and disadvantages of existing methods of diagnostics, realized by means of an eigen frequencies method, and, accordingly, develops new system. The method essence consists in that in most cases (not always) the presence of any mechanical defects in wheel pair of the railway car leads to the shift of eigen frequencies (defined in statistical sense) of the investigated unit.

In the base of a method the correlational comparisons of two or more average spectrum lies, which have been received by piezo-acceleration gage at same mutual arrangement of diagnosed object (wheel or axis of WMB), tared emitter and piezo-acceleration gage. The shift degree of the main eigen frequencies of a wheel or axis is generally analyzed (in statistical sense, using factor of Spirmen coefficient of rang

correlation). However, the real objects have basically infinite number of eigen frequencies. Unfortunately, the method described in work of Desyatnikov V.E., is based on the analysis of the only basic own frequencies, which are available for allocation by existing methods of frequency selection (Fig. 6).

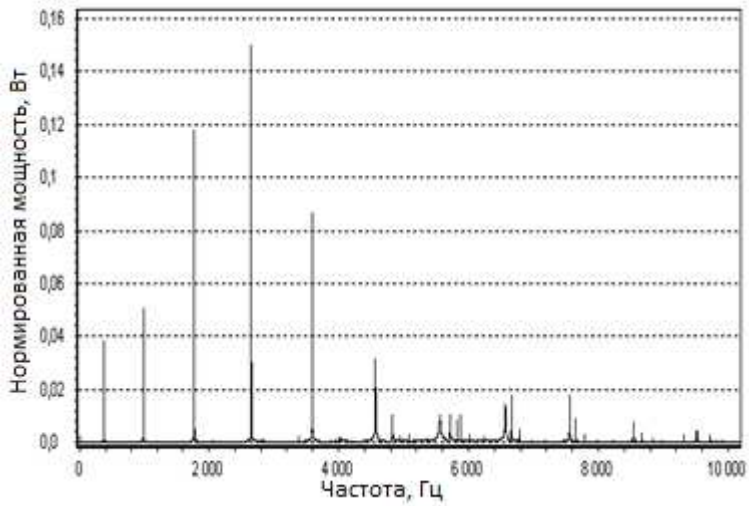

Fig. 6. *Power spectrum of non-defective signal*

Analyzing features of a considered method, it is possible to reveal the following problems which can arise at its application:

1. Eigen frequencies are in a very narrow frequency range and not available for detection by existing tools of filtration methods;
2. The critical closeness of own frequencies doesn't allow to divide them by passband filters because of their rather wide passband widths. As a result, there can be a situation when the only one of near eigen frequencies has shifted at the presence of defect, but passband filter selected both frequencies.

The solution of the problems mentioned above comes to the search of algorithms, which allow performing of relatively narrow-band and/or high-selective filtration of the signal, which describes vibration process, on the platforms with finite length of machine arithmetic. However, there are no such methods descriptions in the literature, except of the author's works.

11.2 Development of the Base Substructure - Biline

It is necessary to notice that the complexity of the structure of diagnosed object(-s), level of demanded safety which should provide this object, and also minimization of time of the entire diagnostic process impose quite rigid requirements to already existing and developed methods of digital diagnostics. In this connection, there is a severe need in designing and development of inexpensive and high-efficiency diagnostic systems on platforms with *finite word length of machine arithmetic*.

Summarizing the existing methods of vibration diagnostic above considered it is possible to allocate the basic actual ***problems*** at their realization:

1. *Selection* of relatively narrow band of the frequency spectrum for the further processing;
2. *Separation* of two or more near frequency bands if these bands characterize various sources of vibrations.

One of the high demands to definite kinds of realizations is the possibility of generation of a ***narrow pass-band*** of the filter at strictly controllable level of admissible AFR distortions. However, after deep analysis of the domestic and foreign references on the given problem, the author has drawn a conclusion that, despite a severe need, there are still insufficiently developed, and, more often, completely no methods of synthesis of narrow-band and/or high-selective digital filters on computing platforms with given word length machine arithmetic.

Direct realization of recursive digital filters – the most widely known realization and, at the same time, not deprived of the following disadvantages: high sensitivity to precision of multipliers setting (where the relatively low reserve of filters stability as well as bad dynamic follows from); impossibility to realize the relatively high-order filters, which are low-sensitive to AFR distortions in the passband; relatively large minimum realizable passband. The transfer function of the direct realization of N-order is described by the expression (2):

$$H(z^{-1}) = H_0 \frac{b_0 + b_1 z^{-1} + \ldots + b_N z^{-N}}{1 + a_1 z^{-1} + \ldots + a_N z^{-N}}. \qquad (2)$$

In a common case all multipliers of the direct structure of Nth-order are real.

More often the complicated selective system is realized in a form of **cascade biquades** (2nd-order units) connection (Fig. 7, Fig. 8).

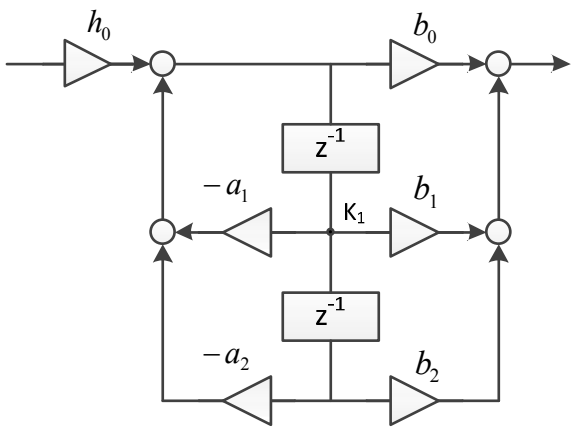

Fig. 7. *Structural scheme of the single biquad*

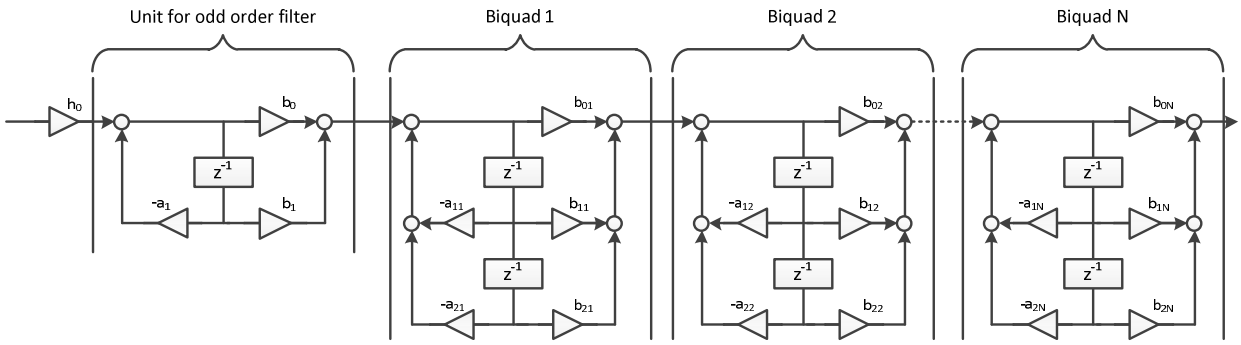

Fig. 8. *Structural scheme of cascade biquades connection*

The transfer function of the digital biquad structure is described in general by expression (3):

$$H(z^{-1}) = H_0 h_0 \frac{b_0 + b_1 z^{-1}}{1 + a_1 z^{-1}} \prod_{i=1}^{(N-1)/2} \frac{b_{0i} + b_{1i} z^{-1} + b_{2i} z^{-2}}{1 + a_{1i} z^{-1} + a_{2i} z^{-2}}. \quad (3)$$

Such connection allows lowering of the AFR sensitivity in a pass-band to inaccuracy of the filter's parameters setting. The clear advantages of application of biquad realizations in digital signal processing are as follows:

- possibility of creation of stable filter structure of the high order, which considerably exceeds the maximum possible realizable order of the stable direct realization;
- the minimum realizable passband of biquad realization is some orders less than a minimum realizable passband of the direct structure at identical requirements to their amplitude-frequency responses.

Nevertheless, known realizations possess rather high sensitivity to errors of computing operations and/or big computing complexity. It directly leads to impossibility of synthesis of narrow-band and, which isn't less actual, high-selective filtration systems.

Conceptually the problem of a choice of new structure can be solved by simple comparison of two traditional realizations - direct and biquad. Their advantages and disadvantages have already been listed above; therefore the main task is the designing of robust structures, which meet the above described rigid requirements at simultaneous simplicity and efficiency of realization.

Investigating the practical genesis of biquad structures from corresponding direct realization, it is logical to make the following step. For development of the new filters it is in principle suggested to use the only first-order units – ***bilines*** (bi-line - transfer function is a relation of two first-order polynomials). The biline's transfer function is derived from the factorization of nominator and denominator biquad polynomials:

$$H_{bil}(z^{-1}) = H_0 h_{01} h_{02} \prod_{i=1}^{2} \frac{b_{0i} + b_{1i} z^{-1}}{1 + a_{1i} z^{-1}}. \quad (4)$$

The transfer function of the separate biline can be represented in the way as follows:

$$H(z^{-1}) = \frac{b_0 + b_1 z^{-1}}{1 + a_1 z^{-1}}. \tag{5}$$

The block-diagram of the ***biline***'s structure which transfer function is described by the expression (5) is shown on Fig. 9.

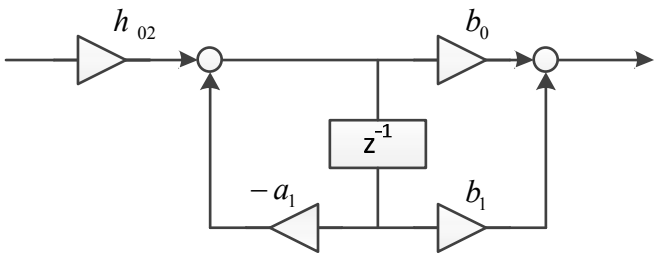

Fig. 9. *Biline's structural scheme*

The structural scheme of the cascade bilines connection, corresponding to the expression (4), is shown on Fig. 10.

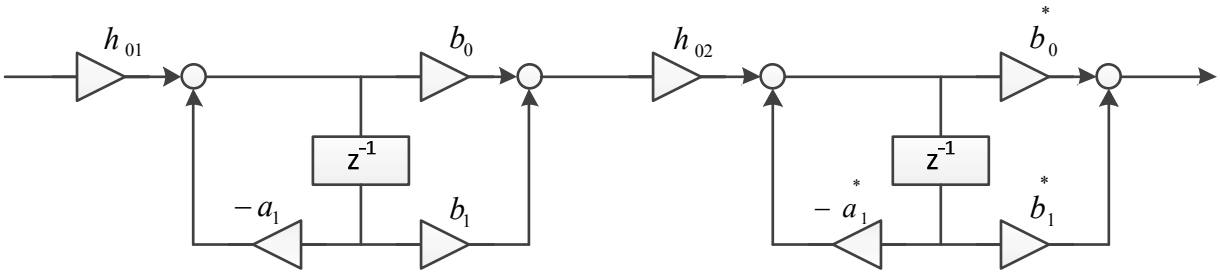

Fig. 10. *Cascade bilines connection*

Unlike biquad, the factors of biline's transfer function in general are complex. It considerably complicates the realization; however the possibilities of considerable simplification of the biline structure will be later shown meeting the general requirements to AFR in a working frequency range.

Comparing the passband widths of the direct, biquad and biline realizations (Table 1; passband ripple, a_{max}=0.1 dB), it might be shown that the effective passband width of the filter on bilines is 6-8 orders lower, rather than the effective passband width of the filter on biquades.

Table 1. Minimum passband widths of direct, biquad and biline realization of elliptical filter

Order	N	5	7	9	11	13	15	17
Stopband ripple	a_{min}, dB	20	50	80	110	140	170	200
Direct	$\tilde{\Omega}_1$	$1.5\cdot10^{-3}$	$9.5\cdot10^{-2}$	$2.5\cdot10^{-2}$	$5.2\cdot10^{-2}$	-	-	-
Biquad	$\tilde{\Omega}_1$	$8.0\cdot10^{-8}$	$8.0\cdot10^{-8}$	$1.5\cdot10^{-7}$	$2.4\cdot10^{-7}$	$4.2\cdot10^{-7}$	$4.2\cdot10^{-7}$	$4.2\cdot10^{-7}$
Biline	$\tilde{\Omega}_1$	**$2.8\cdot10^{-16}$**	**$2.8\cdot10^{-15}$**	**$5.1\cdot10^{-14}$**	**$7.0\cdot10^{-14}$**	**$7.0\cdot10^{-14}$**	**$8.0\cdot10^{-14}$**	**$8.9\cdot10^{-14}$**

Let us show the module of amplitude-frequency response on biline low-frequency filter at relatively high structure order (Fig. 11):

- order N = 200;
- cut-off frequency $\widetilde{\Omega}_1 = 10^{-4}$;
- passband ripple $a_{\max} = 0.01\,dB$.

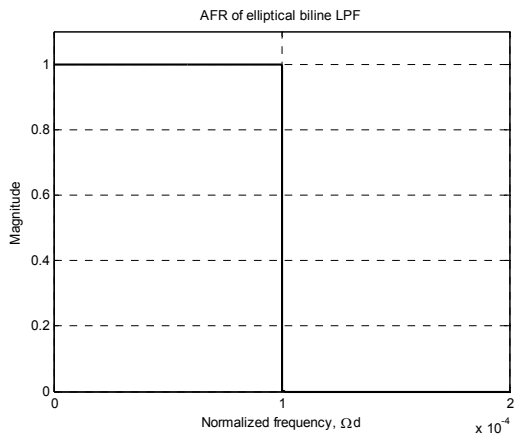

Fig. 11. *The module of AFR of elliptical biline LFF at high requirements*

Let us estimate the minimum realizable passband width of elliptical biline LFF under the following high requirements to its frequency response (Fig. 12):

- order: N = 30;
- passband ripple: $a_{\max} = 10^{-2}\,dB$;

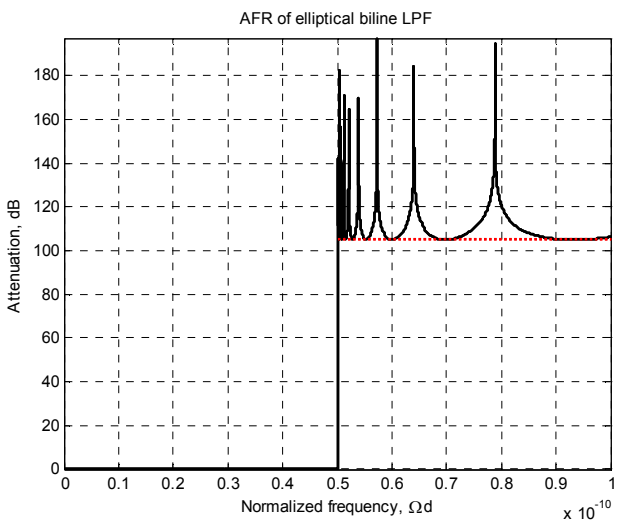

Fig. 12. *The attenuation of elliptical biline LFF at high requirements*

The minimum realizable passband width is about $\widetilde{\Omega}_1 = 5 \cdot 10^{-12}$ in a given example.

Since the limited word length of machine arithmetic leads to occurrence of quantization noise of intermediate calculations, the accuracy of the vibration signal processing depends in a greater degree from the way of architecture realization of the digital signal processor.

Analyzing biquad structure, it is simple to notice that quantization noise is formed as a result of multiplication and summation operations. Hence, the quantization noise evaluated as a result of multiplication of delayed signal from point K_1 by the factor of the multiplier a_2 (Fig. 7), influences the subsequent accuracy of calculations at multiplications by a_1, b_0, b_1, b_2. Analyzing the corresponding cascade bilines connection, it is possible to see that the quantization noise of a recursive chain of the second biline doesn't influence on accuracy of calculations in a chain of the first biline (Fig. 10). It is, at least, one of the factors, which characterize the improved biline robustness in comparison with biquad.

Then, it is necessary to qualitative estimate the influence character of the machine arithmetic to the realizability of the characteristics, which met set requirements. The used arithmetic will be designated as [W, F] bit, where W (Word) – full length of the machine word, bit; F (Fraction) – length of the fractional part, bit. The modelling of the functioning of separate structures will be performed with the usage of the most widespread lengths of machine arithmetic with fixed point, namely 16-bits and 32 bits.

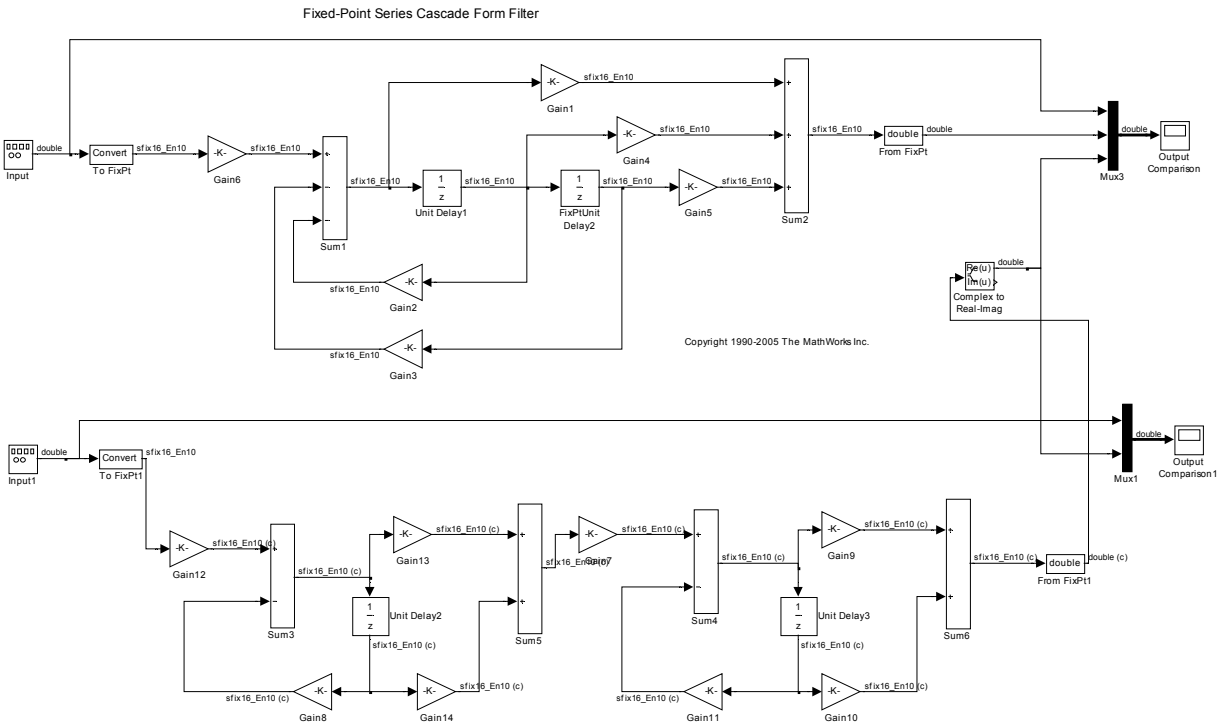

Fig. 13. *The models of biquad and corresponding bilines pair in Simulink Fixed Point*

The time responses of the biquad and biline filters to the input square-pulse signal at multipliers precision of 16 bits are shown on (Fig. 14).

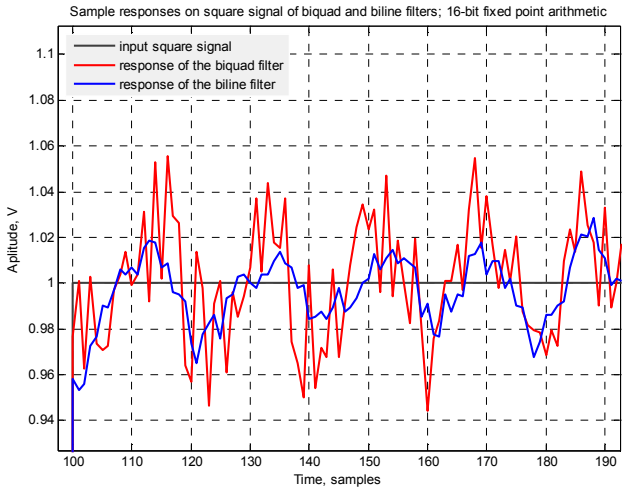

Fig. 14. *Time responses of biquad and bilines pair on a square-pulse input signal*

Analyzing the obtained results, it is easy to notice that the output signal of the cascade combination of bilines is less distorted than the output signal from biquad.

Very often the signal values in different points of the projected digital structure define the one of the main requirements to the signal processor choice during machine realization. An attempt to realize the very narrow passbands using relatively short machine arithmetic might be practically unsuccessful because of relatively large dynamic range of the intermediate calculations values. There are various ways of overcoming of these difficulties – optimization of quantized coefficients, use of floating-point arithmetic, normalization of values of intermediate computations etc. And though the probability of overflows occurrence using the arithmetic with a floating point is rather low, the "loss" of small digits at processing of relatively big numbers can considerably distort the resultant dynamic characteristics of the filter. It becomes especially critical during attempt of structures realization with extreme frequency characteristics – super narrow pass-band, extremely sharp selectivity.

Let us estimate the dynamic range of the internal intermediate computations of biquad and bilines pair at the considered example (Fig. 13) in case of 16-bit fixed point machine arithmetic. The maximum internal signal amplification (Amplification), and also the amount of registers overflows ($N_{overflows}$) and underflows[4] ($N_{underflows}$) in the biquad and biline pair structures depending on used arithmetic are resulted in Table 2; the related program of evaluation of these values is listed in Application 2 of the dissertation paper.

[4] **Underflow** - is a condition in a computer program, that can occur when the true result of a floating point operation is smaller in magnitude (that is, closer to zero) than the smallest value representable as a normal floating point number in the target datatype.

Table 2. Comparison of the amount of overflows and underflows at different machine arithmetic length with fixed point

	Machine arithmetic, bit	[16, 5]	[16, 6]	[16, 7]	[16, 8]	[16, 9]	[16, 10]	[16, 11]	[16, 12]
Biquads	Amplification, dB	**Zero**	**Zero**	33	32	**29**	**22**	**17**	**10**
	$N_{Overflows}$	**0**	**0**	0	0	**1**	**3**	**3**	**3**
	$N_{Underflows}$	**1**	**90**	3	1	**0**	**0**	**0**	**0**
Pair of bilines	Amplification, dB	6.3	11	13	14	14	15	15	15
	$N_{Overflows}$	0	0	0	0	0	0	0	0
	$N_{Underflows}$	83	4	10	6	2	0	0	1

The experiments prove that at enough "short" machine arithmetic the overflows in biquad occur much more often, than in the pair of corresponding bilines. This is explained by the fact that the dynamic range of intermediate calculations in biquad is more than the dynamic range of intermediate calculations in corresponding pair of bilines.

Now, it is necessary to examine the frequency characteristics of the filter on cascade-connected bilines. Let us set the following requirements to the AFR of LFF:

- order: N = 14;
- cut-off frequency $\tilde{\Omega}_1 = 0.1$;
- control frequency: $\tilde{\Omega}_c = 1.01 \cdot \tilde{\Omega}_1$;
- passband ripple: $a_{\max} = 0.1\,dB$;
- machine arithmetic length: [32 20] bits.

The frequency characteristics of the filter on biquades and filter on bilines are shown on Fig. 15.

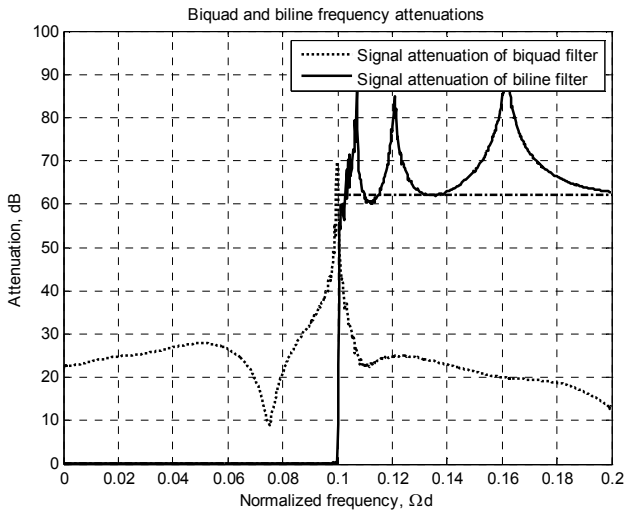

Fig. 15. *The module of AFR of elliptical digital LFF at 32-bits length of machine arithmetic*

As it is shown on Fig. 15, the AFR of the filter on bilines practically completely meet set requirements while the AFTR of the filters on biquades doesn't.

Summarizing all said above, the following advantages in comparison with traditional (direct and biquad realizations) are:

- evaluation the filter's passband down to 8-10 orders;
- realization of high frequency selectivity;
- considerable increase of dynamic range;
- entire structure unification at the expense of using of one-type units;
- simplification of the entire structure at the expense of minimization of the amount of computational operations.

The substructure, which guarantees full passband of frequency components in the whole range, but changes their phases, is usually named as phase unit. Later the possibility of synthesis of duo-channels filters on phase units will be demonstrated; therefore let us discuss the principle of phase bilines synthesis for the purpose of getting better characteristics. The transfer function of the 2nd-order phase unit is easily factorized:

$$H(p)=\frac{p^2-Ap+B}{p^2+Ap+B}=\frac{p-z_1}{p-p_1}\frac{p-z_2}{p-p_2}=\frac{p+\overset{*}{p_1}}{p-p_1}\frac{p+p_1}{p-\overset{*}{p_1}}=\frac{p+p_1}{p-p_1}\frac{p+\overset{*}{p_1}}{p-\overset{*}{p_1}}. \tag{6}$$

Let us apply the low-frequency Z-transformation to the first order transfer function, which is a part of expression (6):

$$\frac{p+p_1}{p-p_1}=\frac{k\dfrac{1-z^{-1}}{1+z^{-1}}+p_1}{k\dfrac{1-z^{-1}}{1+z^{-1}}-p_1}=\frac{k-kz^{-1}+p_1+p_1z^{-1}}{k-kz^{-1}-p_1-p_1z^{-1}}=\frac{(k+p_1)-(k-p_1)z^{-1}}{(k-p_1)-(k+p_1)z^{-1}}=\frac{b_0-z^{-1}}{1-b_0z^{-1}}, \tag{7}$$

where $b_0=\dfrac{k+p_1}{k-p_1}$.

Since the module of the transfer function (7) differs from 1 ($\left|H_{q-bil}(p)\right|\neq 1$), we will call the corresponding sctructure as ***quazi-phase biline***. The best realization of the quazi-phase biline from the point of view of computing complexity consists of:

- 1 complex multiplier;
- 3 complex adders;
- 1 complex delay element.

There are four variants of building of optimized quazi-phase bilines (the same amount can be achieved if moving to inverse structures) (Fig. 16).

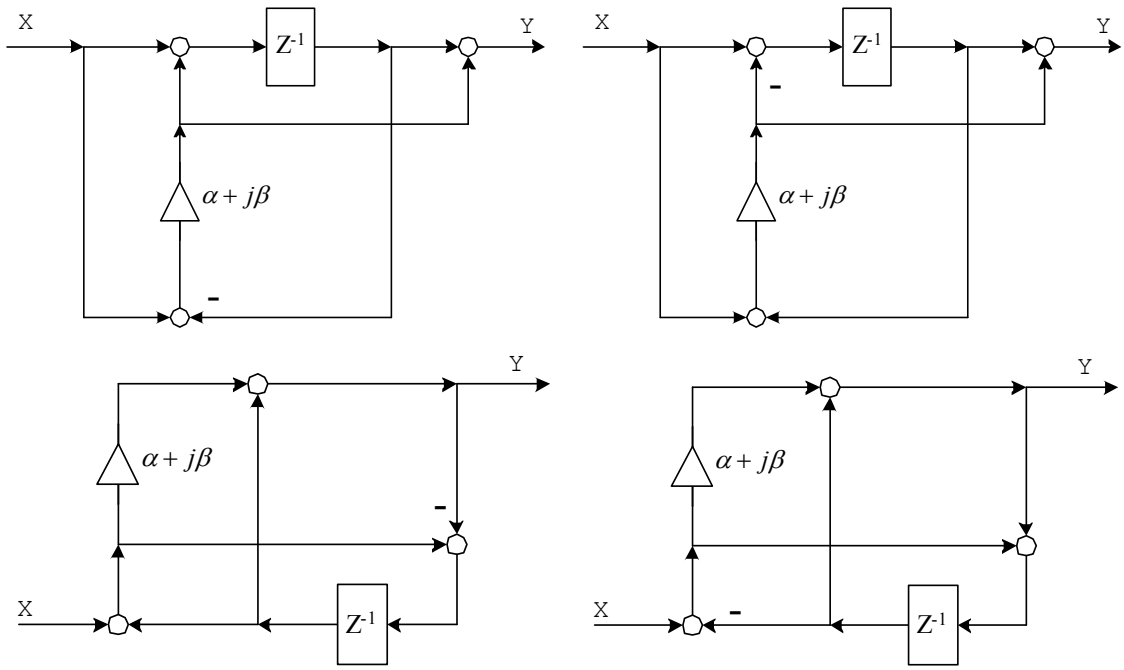

Fig. 16. *Variants of quazi-phase bilines realizations*

The quazi-phase biline which transfer function is described by expression (7), in particular, can be effectively used in two-channel digital phase filters, which synthesis will be discussed later.

11.3 Synthesis of Polynomial Filters on Computational-Effective Bilines

The structures of digital bilines of general type, suggested above, basically possess undesirable redundancy because of presence both recursive and not recursive parts. It is explained to that the analog prototypes described by transfer function of a kind a constant, divided by a polynomial, during bilinear transformation in digital area, unfortunately, have the corresponding fractional-rational transfer functions which numerator distinct from a constant. For example, the prototypes of Butterworth and Chebyshev Type I prototypes correspond to these prototypes.

The special method of synthesis of polynomial super narrow-band structures, using traditional frequency transformation, is suggested. In the given case the synthesized bilines are described by the new characteristics class, namely – by the ***polynomial*** transfer functions:

$$H_i(p) = \frac{b_i}{p - p_i} \qquad \text{or} \qquad H_i(z^{-1}) = \frac{1 + z^{-1}}{1 + a_i z^{-1}} \tag{8}$$

For super narrow-band filters, it is desirable to use the simplified biline structures, numerators of which transfer function are units. In this case the modified transfer function is described by the expression (9):

$$H(z^{-1}) = H_0 \frac{1 + z^{-1}}{1 + a_0 z^{-1}} \prod_{i=1}^{N-1} \frac{1}{1 + a_{1i} z^{-1}} . \tag{9}$$

At the relatively wide required passbands (~0.5 of the normalized frequency) the frequency characteristics of polynomial simplified filters on bilines don't met requirements, but met them at decreasing of the passband width till 10^{-14} (Fig. 17, Fig. 18).

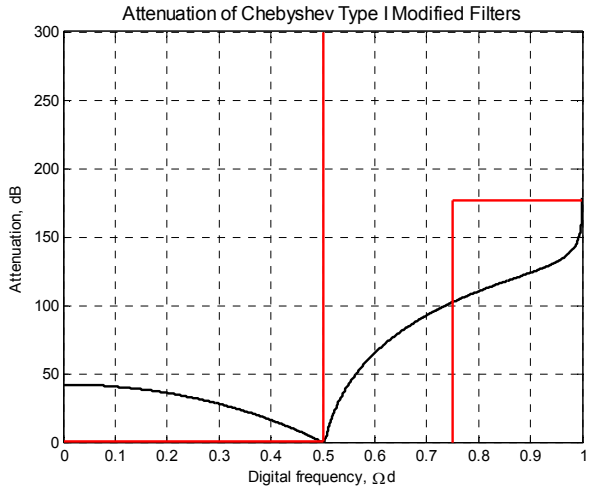

Fig. 17. *Module of AFR of polynomial filter on bilines*

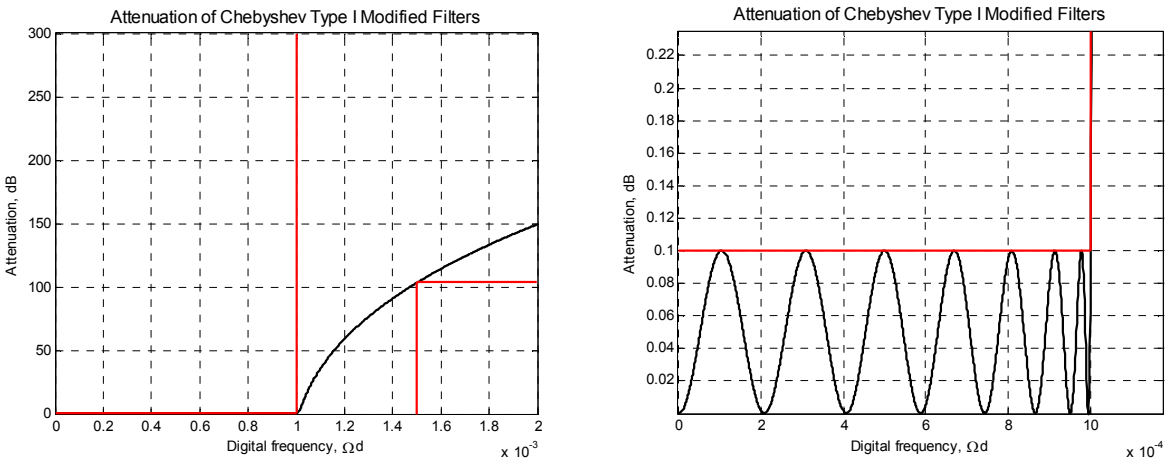

Fig. 18. *Module of amplitude-frequency response of polynomial biline filter with normalized passband width of* $\widetilde{\Omega}_1 = 1 \cdot 10^{-3}$

Let us consider the second method of biline structure simplification. As it is known, the tangent frequency transformation corresponds to traditional bilinear transformation for synthesis of low-frequency digital filters, and the cotangent frequency transformation corresponds to traditional bilinear transformation for synthesis of high-frequency digital filters. Use of both frequency transformations at transformation of a prototype transfer function to transfer function of the digital filter leads to the fractional-rational type of the last one:

$$H_i(p) = \frac{1}{p - p_i} \quad \Rightarrow \quad H_i(z^{-1}) = \frac{B_i(z^{-1})}{A_i(z^{-1})}. \tag{10}$$

It is offered to use the known *sine* and *cosine* frequency transformation which gives the best approximation in the area of the low frequencies (11):

$$\Omega = k \cdot \sin\left(\frac{\pi}{2}\tilde{\Omega}\right), \quad \Omega = k \cdot \cos\left(\frac{\pi}{2}\tilde{\Omega}\right). \tag{11}$$

Such transformations allow keeping the polinomiality of the transfer function while moving to Z-area:

$$H_i(p) = \frac{1}{p - p_i} \quad \Rightarrow \quad H_i(z^{-1}) = \frac{const}{A_i(z^{-1})}. \tag{12}$$

Digital filters which have transfer function of the type (12) have only recursive part, which in a certain measure simplifies its realization. The algorithm of the transfer function poles evaluation is described in paper, so we will stay at the description of the polynomial transfer function of modified biline:

$$H_i(z^{-1}) = \frac{1}{1 - z_i z^{-1}} \quad or \quad H_i(z^{-1}) = \frac{1}{1 + a_i z^{-1}}. \tag{13}$$

The so-called ***truncated*** biline, which transfer functions is described by expression (13), have the structure shown on Fig. 19:

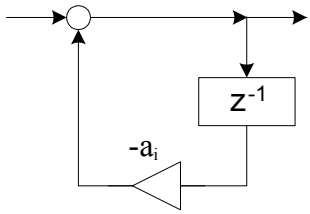

Fig. 19. *Computational-effective (truncated) biline structure*

Let us consider an opportunity of ***passband*** filters realization on computational-effective structures. As it has been described above, while designing the new LF and HF-structures were used such Z-transformations, which at transition from the prototype to the digital filter kept transfer function in the form of a constant, divided on a polynomial. In case of the passband filter it is inconvenient to use simple transformation with the same properties, providing satisfaction of the frequency characteristics to the requirements in the field of super narrow bands. Therefore we shall consider the following approach.

While using the standard passband Z-transformation the transfer function of N-order digital filter is the relation of two N-degree polynomials of z^{-1}. Generally zeros of transfer or poles of attenuation are provided with a transfer function's enumerator. It is known, that Chebyshev type I filter has no poles of attenuation. Zeros of attenuation or satisfactions to the requirements in a passband are provided with a denominator of transfer function.

Let us consider the possibility of passband filter realization, which transfer function in Z-plane is described by the expression (14):

$$H_N(z^{-1}) = \frac{B_N(z^{-1})}{A_N(z^{-1})} \qquad \Rightarrow \qquad H_N(z^{-1}) = \frac{B_1(z^{-1}) \cdot B_2(z^{-1})}{A_N(z^{-1})} \tag{14}$$

So, in the case of expression (14) the denominator of initial transfer function is kept, and m 2nd-order polynomials are realized in the numerator; each of them provides one pole of attenuation outside of passband of the projected filter. The transfer function of the 2nd-order unit, providing a pole of attenuation on frequency $\widetilde{\Omega}_i$, is described by the expression (15):

$$B_1(z^{-1}) = 1 + 2b_1 z^{-1} + z^{-2} = 2z^{-1}\left(b_1 + \frac{z + z^{-1}}{2}\right) = 2z^{-1}\left(b_1 + \cos\left(\pi\widetilde{\Omega}\right)\right), \qquad b_1 = -\cos\left(\pi\widetilde{\Omega}_1\right) \tag{15}$$

The transfer function of the second unit is described similarly. Let us rewrite the expression (14), having the expressions (15) for each of two attenuation poles in the nominator of the transfer function:

$$H(z^{-1}) = \prod_{i=1}^{N/2} \dot{h}_{0i} \frac{(1 + 2b_{1i} z^{-1} + z^{-2}) \cdot (1 + 2b_{2i} z^{-1} + z^{-2})}{1 + a_{1i} z^{-1} + a_{2i} z^{-2}}. \tag{16}$$

If the denominator $A_N(z^{-1})$ is kept without changes, then the new frequency characteristics will not meet the requirements in a pass-band. Therefore we shall address to numerical methods and let us optimize the transfer function (16), so it would look as follows:

$$H(z^{-1}) = \prod_{i=1}^{N/2} \dot{h}_{0i} \frac{(1 + 2b_{1i} z^{-1} + z^{-2}) \cdot (1 + 2b_{2i} z^{-1} + z^{-2})}{1 + (a_{i1} + \alpha_{1i} + j\beta_{1i}) z^{-1} + (a_{2i} + \alpha_{2i} + j\beta_{2i}) z^{-2}}. \tag{17}$$

As the initial approach the coefficients (a_1, a_2) of a of transfer function's denominator of the usual passband filter are used. Selecting α and β coefficients, we optimize amplitude-frequency response by a numerical method (for example, Nelder-Mead).

Let us show the frequency responses of the filter, projected by the method described above; set the requirements as follows:

1. Filter order N = 12;
2. Passband ripple a_{max}= 0.1 dB;
3. Central frequency $\widetilde{\Omega}_0 = 0.19$;
4. Left cut-off frequency $\widetilde{\Omega}_{-1} = 0.189$;
5. Right cut-off frequency $\widetilde{\Omega}_1 = 0.191$.

As it is shown on Fig. 20, if a denominator in the transfer function of the projected digital filter will remain without changes, the frequency characteristic would not meet to the set of requirements, even within the limits of admissible distortions.

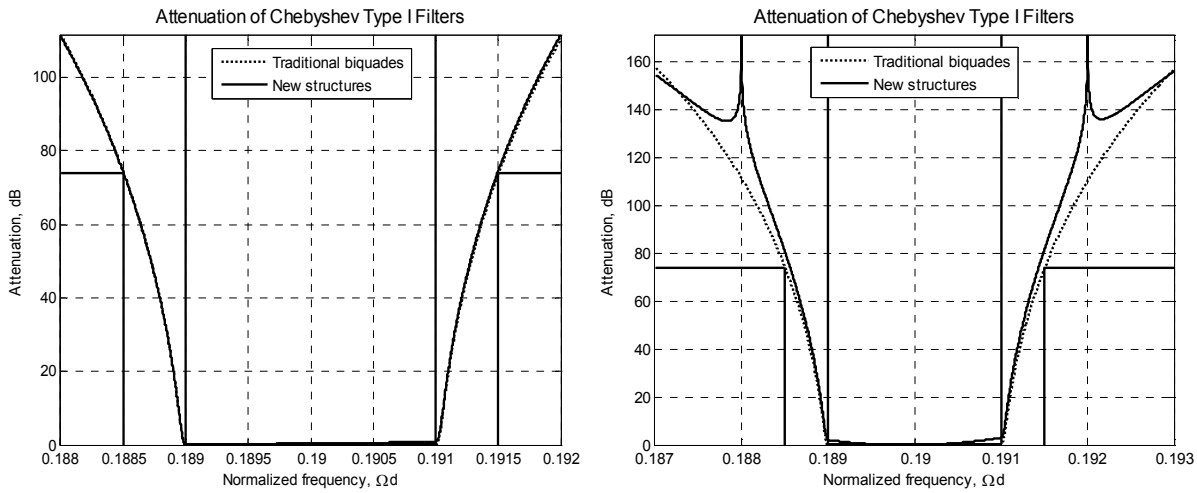

Fig. 20. *Amplitude-frequency characteristics of synthesized passband filter without optimization*

Let us lead the optimization by one of numerical methods, for example, by Nelder-Mead. Before optimization we should evaluate initial approach – coefficients (a_1, a_2). As it was explained above, this approach should be determined for the filter with the decreased amax. So, suppose a_{max} = 0.04 dB. Then we need to set two poles of attenuation in the stopband area (Ω_{-1}, Ω_1). Selecting coefficients α_i and β_i in the transfer function described by the expression (16), we optimize amplitude-frequency response so, that its degree of a passband deviation would be the minimum, until it becomes equal or less than required amax (0.1 dB).

The frequency characteristics of the optimized transfer function of simplified passband filter are shown on Fig. 21. Thus the maximal non-uniformity of passband attenuation is 0.09 dB in comparison with demanded 0.1 dB. Apparently on the figure, attenuation on the control frequency has reserve and some dB more, than provided by traditional biquad structure.

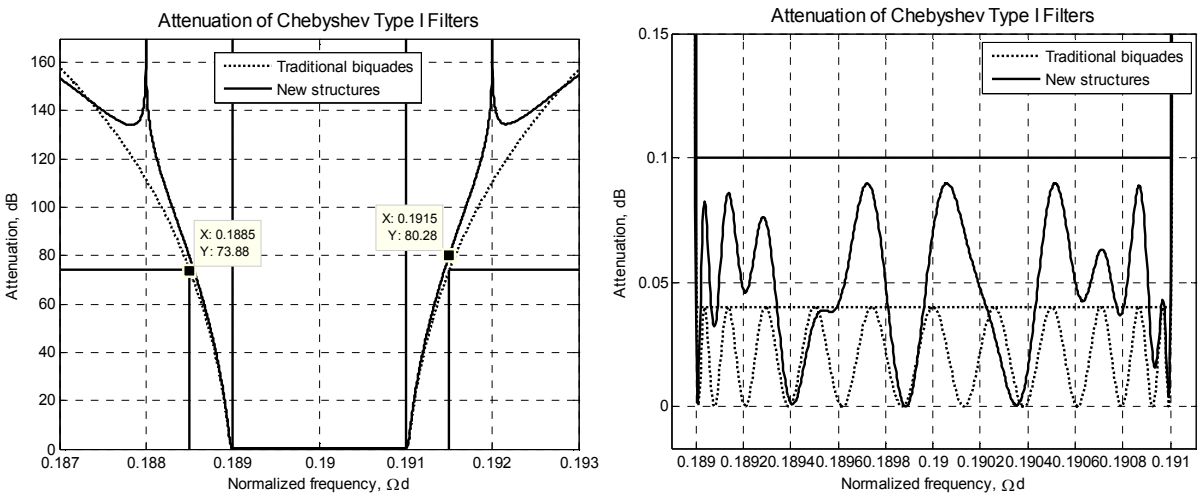

Fig. 21. *Amplitude-frequency characteristics of synthesized passband filter after coefficients optimization*

We will reduce the passband down to $2 \cdot 10^{-4}$ of normalized frequency and repeat the AFR optimization until the attenuation in a passband is equal to 0.09 dB. Results are shown on Fig. 22.

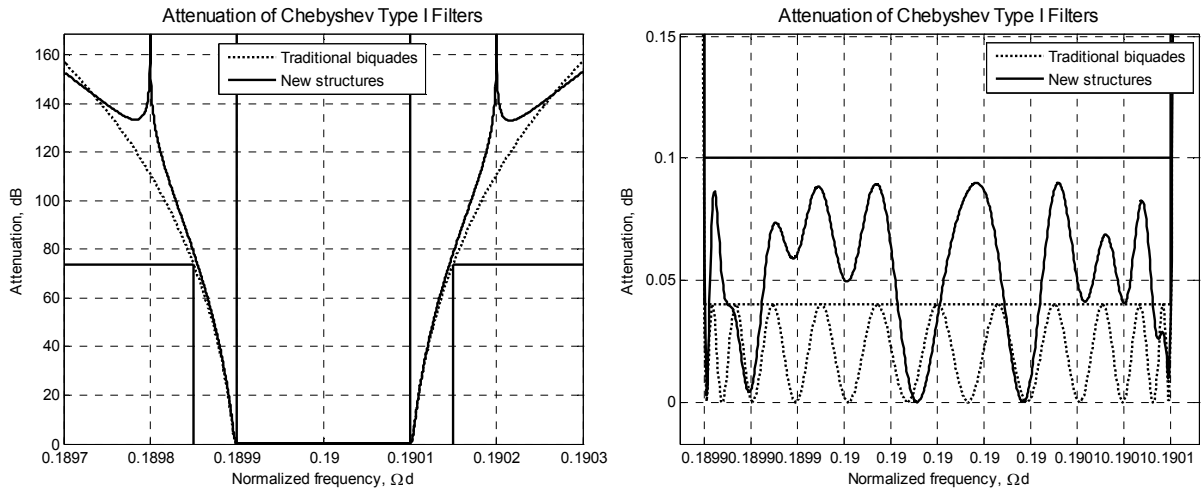

Fig. 22. *Amplitude-frequency characteristics of synthesized passband filter after coefficients optimization*

Let us arrange two poles on zero frequency and Nyquist frequencies that are on 0 and 1 of normalized scale. We optimize the AFR in a passband at all other requirements. Results are shown on Fig. 23.

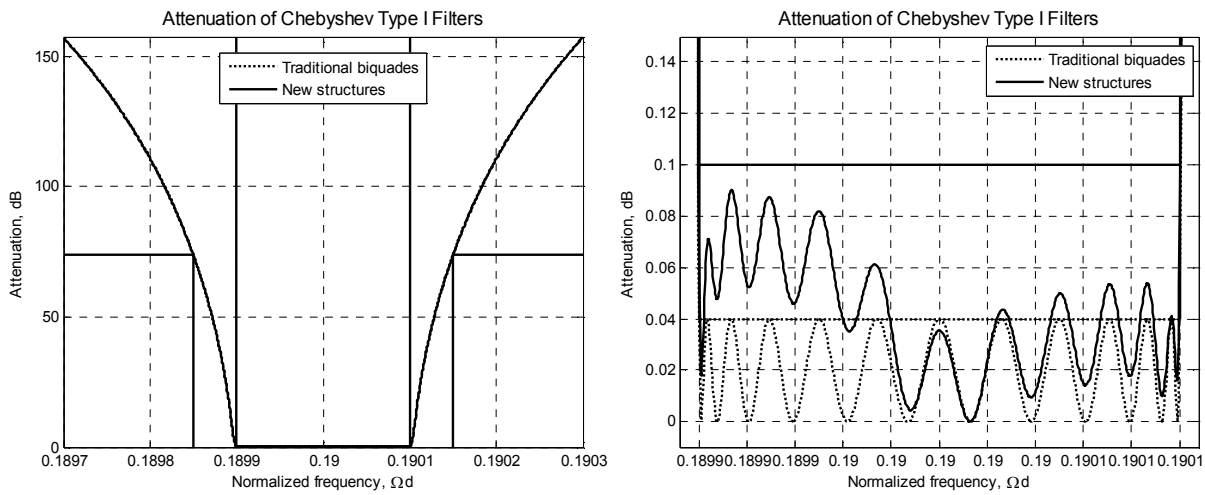

Fig. 23. *Frequency characteristics of the traditional biquad filter and "truncated" structure with poles at edges of a frequency range*

As it is shown on Fig. 23 above, at the set passband ripple 0.1 dB the maximal deviation from requirements makes nearby 0.05 dB. Moreover, the characteristics of the optimized structures completely meet the requirements on control frequency and inside the passband.

11.4 Optimization of the Filter Structure on Bilines

As it has been mentioned in Chapters 1.3, 1.4, the poles of the transfer functions of projected truncated bilines form complex-conjugate pairs. It allows effectively implement their real-time modelling. Let us consider the following bilines pair, which multipliers coefficients are complex-conjugate (Fig. 24).

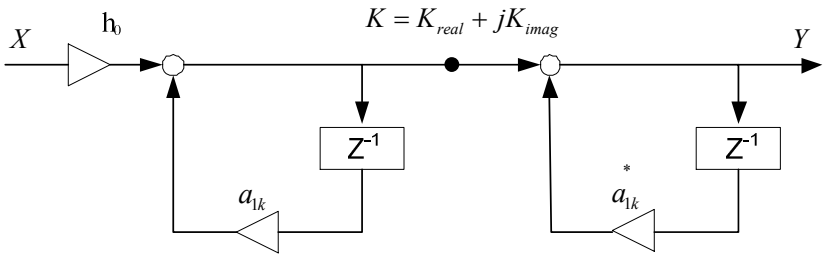

Fig. 24. *The structural scheme of computational-effective bilines cascade connection*

where $a = \alpha + j\beta, \quad \overset{*}{a} = \alpha - j\beta.$

Let us describe the operation of each biline in real time subject to that input signal X is purely real. Since the transfer functions of the bilines in a pair are complex conjugate, then the output signal Y is also real. We shall mean the connection of bilines as K point that has both real and imaginary parts. Then the signal in point K for the first biline:

$$K_{real} + jK_{imag} = X + (\alpha + j\beta)(M_{1real} + jM_{1imag})$$

$$K_{real} + jK_{imag} = X + \alpha(M_{1real} + M_{1imag}) - M_{1imag}(\alpha + \beta) +$$
$$+ j\left(\alpha(M_{1real} + M_{1imag}) + M_{1real}(\beta - \alpha)\right)$$

Similarly, the signal value at the output of the bilines pair:

$$Y = K_{real} + jK_{imag} + (\alpha - j\beta)M_{2real}$$
$$Y = K_{real} + jK_{imag} + \alpha \cdot M_{2real} - j\beta \cdot M_{2real}$$

But since the output signal of the considered pair is real: $Y = K_{real} + \alpha \cdot M_{2real}$.

As a result, the pair of biline units with complex conjugate multipliers is modified into the next structure (Fig. 25):

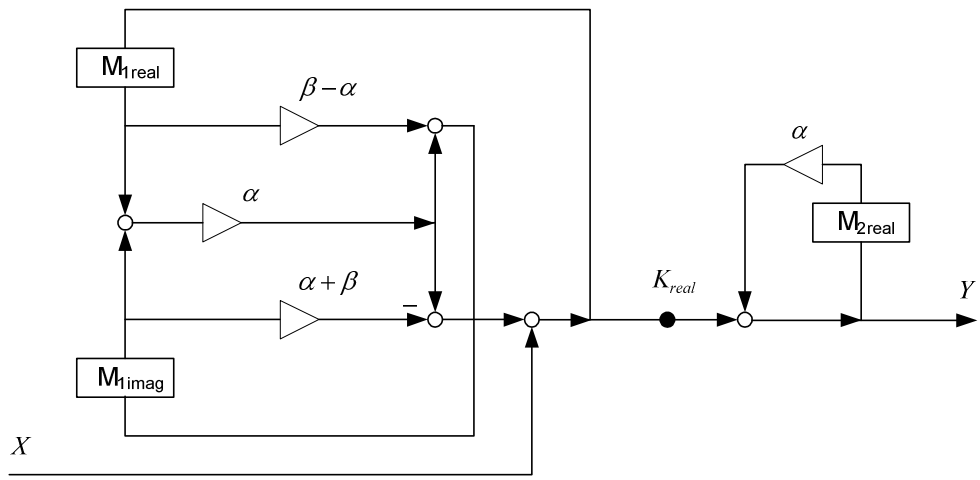

Fig. 25. *Structure scheme of computational-effective bilines pair*

The Fig. 25 indicates the one of minimum possible forms of realization, shown on the Fig. 24.

As it has been mentioned above, the one of the major criteria at development of diagnostics systems is its performance. In this regards the option of the effective parallel connection of bilines with complex-conjugate coefficients is suggested. It is possible to present the transfer function of the filter on bilines in the form of the sum of pairs of first-order transfer functions with complex-conjugate factors, using residues:

$$H(z^{-1}) = \frac{B(z^{-1})}{A(z^{-1})} = H_0 \prod_{i=1}^{N-1/2} \frac{(1-p_i z^{-1})(1-\overset{*}{p}_i z^{-1})}{(1-z_i z^{-1})(1-\overset{*}{z}_i z^{-1})} = H_0^{'} \left(\sum_{i=1}^{N-1/2} \left(\frac{K_i z_i}{1-z_i z^{-1}} + \frac{\overset{*}{K}_i \overset{*}{z}_i}{1-\overset{*}{z}_i z^{-1}} \right) + 1 \right), \tag{18}$$

where:

$$K_i z_i = \left. \frac{B(z^{-1})}{(p_i - \overset{*}{p}_i)} \right|_{z^{-1}=p_i} \Rightarrow K_i z_i = \frac{B(p_i)}{2\,\mathrm{Im}(p_i)}, \quad \text{or} \quad H(z^{-1}) = H_0^{'} \left(\sum_{i=1}^{N-1/2} \left(\frac{b}{1+a_i z^{-1}} + \frac{\overset{*}{b}}{1+\overset{*}{a}_i z^{-1}} \right) + 1 \right) \tag{19}$$

Similarly to the case of cascade connection of bilines, the expression (19) allows effectively realize real-time modeling of parallel bilines connection. Let consider the following bilines pair (Fig. 26).

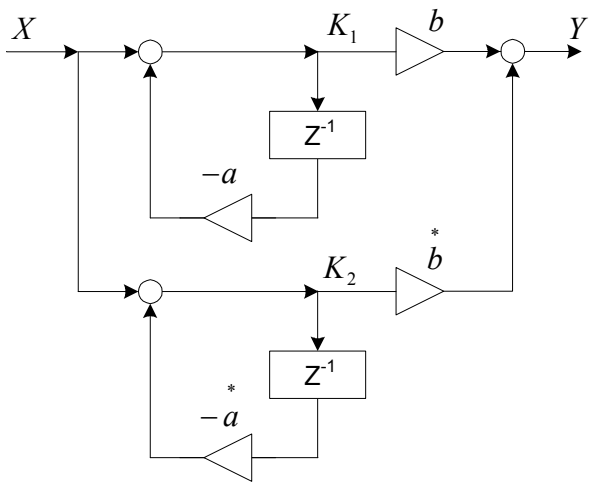

Fig. 26. *Structural scheme of the parallel connection of computational-effective bilines*

Similar transformations equal to the ones shown above are described in paper. So we will show only the final variant of the transformed parallel biline connection.

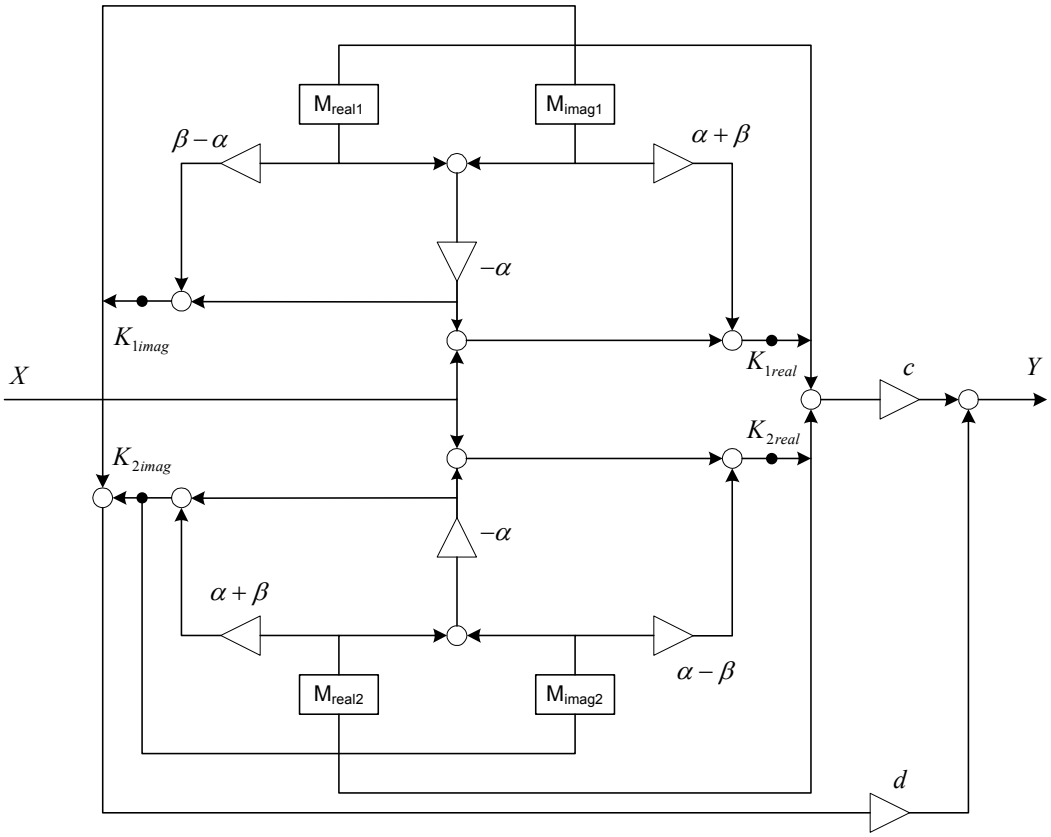

Fig. 27. *Modified structural scheme of the parallel connection of computational-effective bilines*

The Fig. 27 indicates the one of minimum possible forms of realization, shown on the Fig. 26. At the same time the traditional variant of parallel connection of such bilines consists of minimum 12 real multipliers, 6 adders and 4 delay elements.

The quazi-phase bilines as the particular case of bilines realization have been considered above. In the context of the given Chapter it is logically to consider the cascade connection of quazi-phase bilines for the purpose of the entire filter structure simplification.

From the point of view of real arithmetic, the best realization of quasi-phase biline has 3 real multipliers (usual - 9), 9 real adders (usual - 18), 2 real delay elements.

The modification considered below is based on that the usual second-order phase unit is changed with cascade-connected pair of quasi-phase bilines with complex multipliers (Fig. 28, Fig. 29).

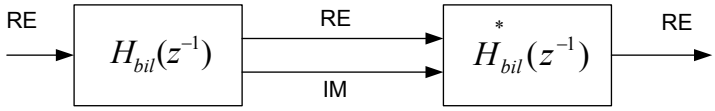

Fig. 28. *Change of second-order phase unit with cascade connection of quasi-phase bilines*

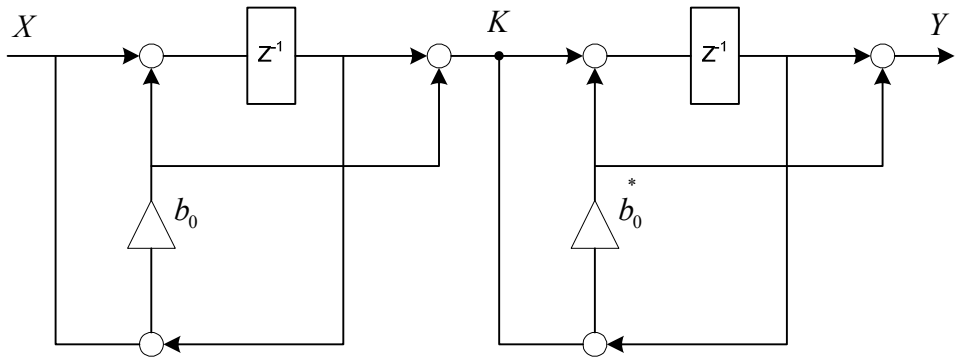

Fig. 29. *Structural scheme of quasi-phase bilines pair with complex-conjugate multipliers*

Transfer functions of these bilines have complex-conjugate coefficients of multipliers; its realizations are shown on Fig. 30.

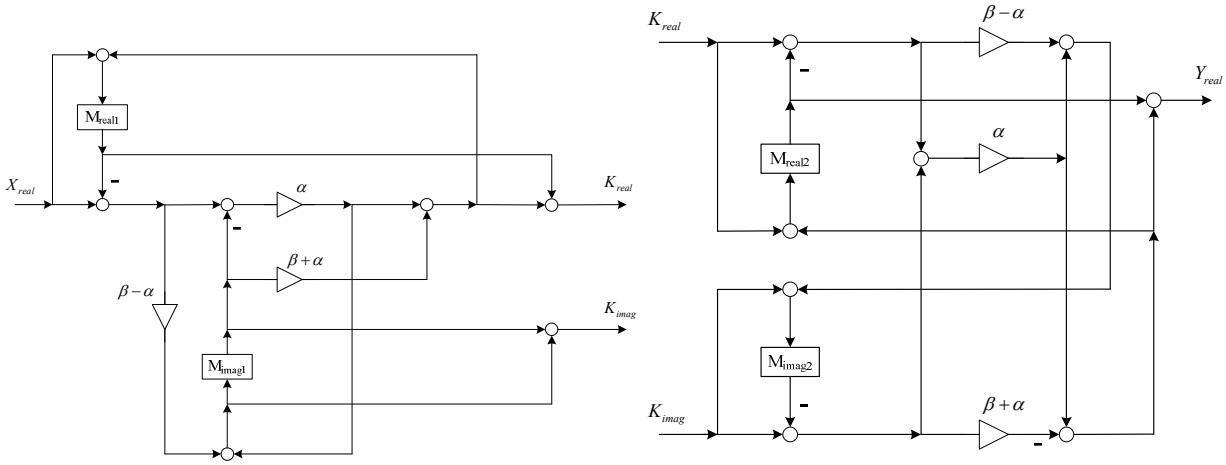

Fig. 30. *Structures of quasi-phase bilines with real multipliers*

The structures of modified quasi-phase bilines consists of 3 real multipliers, 7 or 8 real adders, 2 real delay elements.

The variants of quasi-phase bilines realization considered above are the optimum structures by quantity of used real operations (particularly, multiplications) by sample. On the other hand, the module of AFR of a separate quasi-phase unit isn't equal to one in all frequency that can lead to overflows in a digit grid of the digital

signal processor. It is logical to consider the second variant of biline realization at which its transfer function in p-area is described not by one complex pole, but by pair – a pole and its complex-conjugate value. Then from (18) the transfer functions of prototypes pairs of such bilines are described by the following expressions:

$$H_{бил1}(p) = \frac{p - p_1}{p + \overset{*}{p}_1}, \qquad H_{бил2}(p) = \frac{p - \overset{*}{p}_1}{p + p_1}, \tag{20}$$

Both units are purely phase:

$$H_{бил1}(p) = \frac{p - p_1}{p + \overset{*}{p}_1} = \frac{j\Omega - (\delta + j\lambda)}{j\Omega + (\delta - j\lambda)} = \frac{-\delta + j(\Omega - \lambda)}{\delta + j(\Omega - \lambda)} \qquad \left|H_{бил1}(p)\right| = 1 \tag{21}$$

Let us perform the Z-transformation upon transfer function (21):

$$\frac{p - p_1}{p + \overset{*}{p}_1} = \frac{k\dfrac{1 - z^{-1}}{1 + z^{-1}} - p_1}{k\dfrac{1 - z^{-1}}{1 + z^{-1}} + \overset{*}{p}_1} = \frac{k - kz^{-1} - p_1 - p_1 z^{-1}}{k - kz^{-1} + \overset{*}{p}_1 + \overset{*}{p}_1 z^{-1}} = \frac{(k - p_1) - (k + p_1)z^{-1}}{(k + \overset{*}{p}_1) - (k - \overset{*}{p}_1)z^{-1}} = \frac{b_0 - z^{-1}}{1 - \overset{*}{b}_0 z^{-1}} \tag{22}$$

We will consider the pair of sequentially linked bilines with complex-conjugate coefficients of multipliers (Fig. 31):

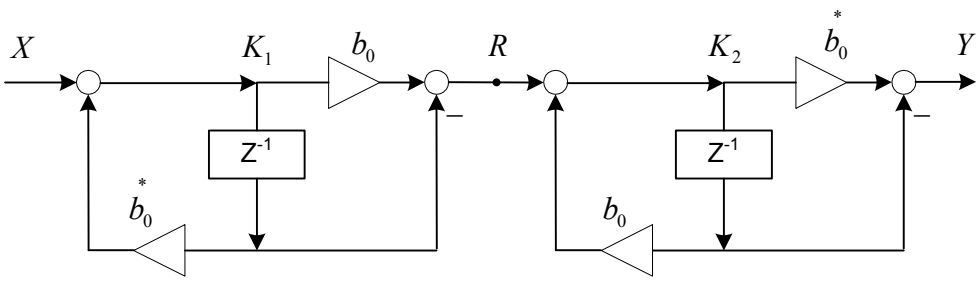

Fig. 31. *The structure of bilines pair with complex-conjugate coefficients of their multipliers*

Similarly to the transformations above mentioned, we can synthesize the pair of the structures with real multipliers coefficients:

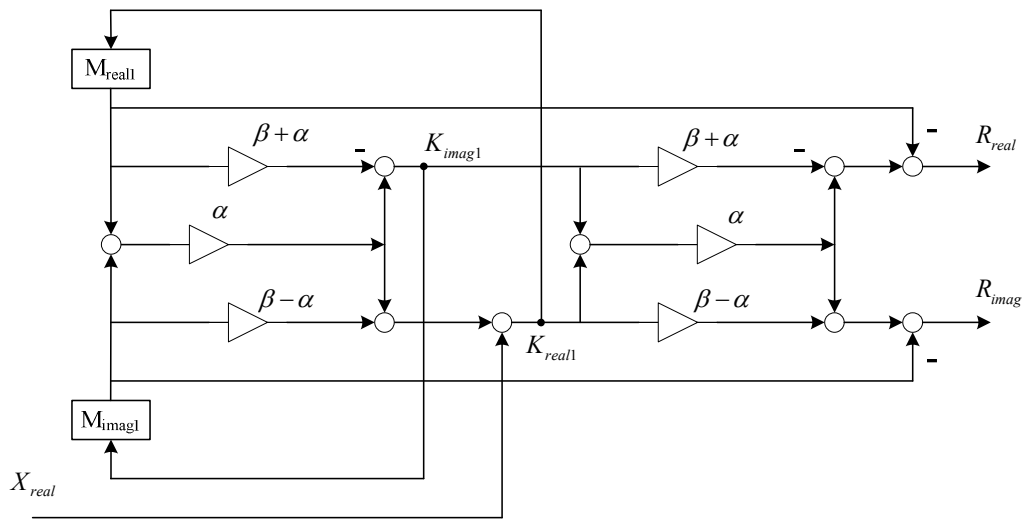

Fig. 32. *Structure of the first phase biline with real multipliers*

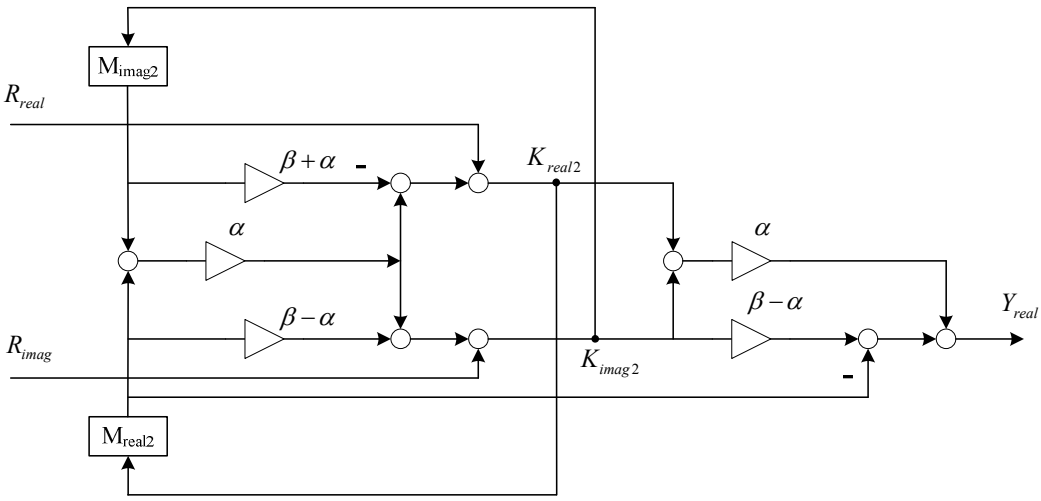

Fig. 33. *Structure of the second phase biline with real multipliers*

As it has been demonstrated above, the basic realization of quasi-phase biline has 3 purely real multipliers. The phase bilines in a pair, considered above (Fig. 32, Fig. 33), has 5 and 6 real multipliers. It complicates the realization, but guarantees absence of arithmetic overflows and, therefore, good dynamic characteristics. The comparison of bilines modifications by the quantity of operations on sample is resulted in Table 3.

Table 3. Count of real operations in different realizations

STRUCTURE	**M**	**A**	**D**
Usual biline	12	9	2
First/second quazi-phase biline (with complex multiplier)	4/4	6/7	2/2
First/second quazi-phase biline (with real multiplier)	3/3	7/8	2/2
First/second phase biline (with real multipliers)	6/5	9/8	2/2

11.5 Realization of Digital Filters Smoothly Operated on the Central Frequency

During synthesis of tunable passband or stopband digital filters the complicated enough bilinear frequency transformations are almost always used, that often leads to doubling of the prototype order. Moreover, at attempt to realize the super narrow-band pass- or stopband filters the double factorization of numerator's and denominator's polynomials of prototype transfer function is required - during conversion from the prototype to digital structure and during decomposition of last one to bilines. It negatively affects the accuracy of transfer function's poles' and zeros' calculations and, finally, influences on inexact reproduction of filter's frequency characteristics. Therefore the problem of the synthesis of passband and stopband filters smoothly tunable by frequency is still pretty important. The one of the approach, which doesn't use traditional passband frequency transformation, is suggested below.

The usual band frequency transformation is described by the expressions (23):

$$\Omega = k\frac{\alpha - \cos(\pi\tilde{\Omega})}{\sin(\pi\tilde{\Omega})}, \qquad k = ctg\left(\frac{\pi}{2}\left(\tilde{\Omega}_1 - \tilde{\Omega}_{-1}\right)\right), \qquad \alpha = \cos(\pi\tilde{\Omega}_0), \qquad \tilde{\Omega}_i = 2\frac{f_i}{f_s}, \tag{23}$$

where k sets the band width and α controls the position of the central frequency.
The known transformation of transfer function of low-frequency prototype into a digital one is described be the expression:

$$H(p) \Rightarrow H\left(k\frac{1 - 2\alpha z^{-1} + z^{-2}}{1 + z^{-2}}\right). \tag{24}$$

The paper [Литюк В.И., Литюк Л.В. Методы цифровой многопроцессорной обработки ансамблей радиосигналов, 2007, p. 127] affirms that «...the construction of passband or stopband filters for processing of the real signals can be realized only with use of biquadratic cells, despite their lacks» (in the given context the biquadratic cells are equivalent to traditional biquades). As counterargument the possibility of tunable bilines synthesis for the subsequent synthesis of passband or stopband is shown in detail in full paper.

Let us consider the following approach. During shifting the zero frequency of the filter to the central frequency Ω_0 of the projected filter $S(\Omega) \Rightarrow S(\Omega - \Omega_0)$ the following transformation of its delay element is occurred:

$$\left[z^{-1} = e^{-j\pi\cdot\tilde{\Omega}}\right] \Rightarrow \left[e^{-j\pi\cdot(\tilde{\Omega}-\tilde{\Omega}_0)} = z^{-1}\cdot e^{j\pi\cdot\tilde{\Omega}_0}\right]. \tag{25}$$

Thus, it is necessary to include the complex multiplier of $A = e^{j\pi\cdot\tilde{\Omega}_0}$ sequentially to the each delay element in the structure of low-frequency digital filter. In this case, it controls or changes the position of central frequency of the band filter during

tuning. Following expression (25), the structural transformation of common type biline is shown on Fig. 34.

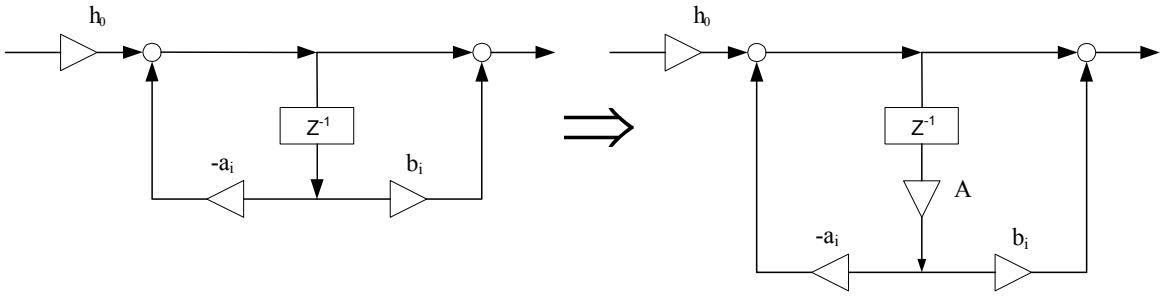

Fig. 34. *Transformation from base to smoothly tunable by frequency biline*

It should be noted, that since $A = e^{j\pi \cdot \tilde{\Omega}_0}$, it is obvious that the band filter with central normalized frequency equal to 0.5 is generated simply enough: in this case, that leads to rearrangement of real and imaginary outputs of a delay element.

11.6 Linearization of the Transfer Function of Biquad Filter with Complex Multipliers

Sometimes during the vibration analysis of the signals, received from vibration sensors it is extremely desirable to keep the form of the signal, which is passed inside the filter passband. This requirement is explained that very often the examination of the form of vibration signal allows correct validation of the defect. Thereon one of the important additional requirements at designing of super narrow-band filters frequently is a high linearity of phase-frequency characteristic. Especially sharply this problem arises at designing of high-selective filters. Unfortunately, the regular approach at definition of the best realization meeting these requirements does not exist yet; therefore the problem is reduced to optimization selection its parameters at imitating or natural modelling.

In given Chapter the method of filter phase characteristics linearization by a choice of parameters of transfer function with complex coefficients is offered.

As base, we shall consider a transfer function of the prototype of the elliptic filter possessing the maximal selectivity with other equal conditions (odd order as an example):

$$H(z^{-1}) = \prod_{i=1}^{N-1/2} h_{0i} \frac{(k^2 + A_i) + 2(A_i - k^2)z^{-1} + (k^2 + A_i)z^{-2}}{1 + 2h_{0i}(C_i - k^2)z^{-1} + h_{0i}(k^2 - B_i k + C_i)z^{-2}}, \tag{26}$$

The coefficients of transfer function are real. Let us consider, for example, frequency characteristics of the elliptic filter at the following requirements:

- cut-off frequency, $\tilde{\Omega}_1 = 0.2$;
- passband attenuation, amax = 0.1 dB;
- stopband attenuation, amin = 60 dB.

The maximal deviation of a phase in a passband reaches size of about 40-50 grad:

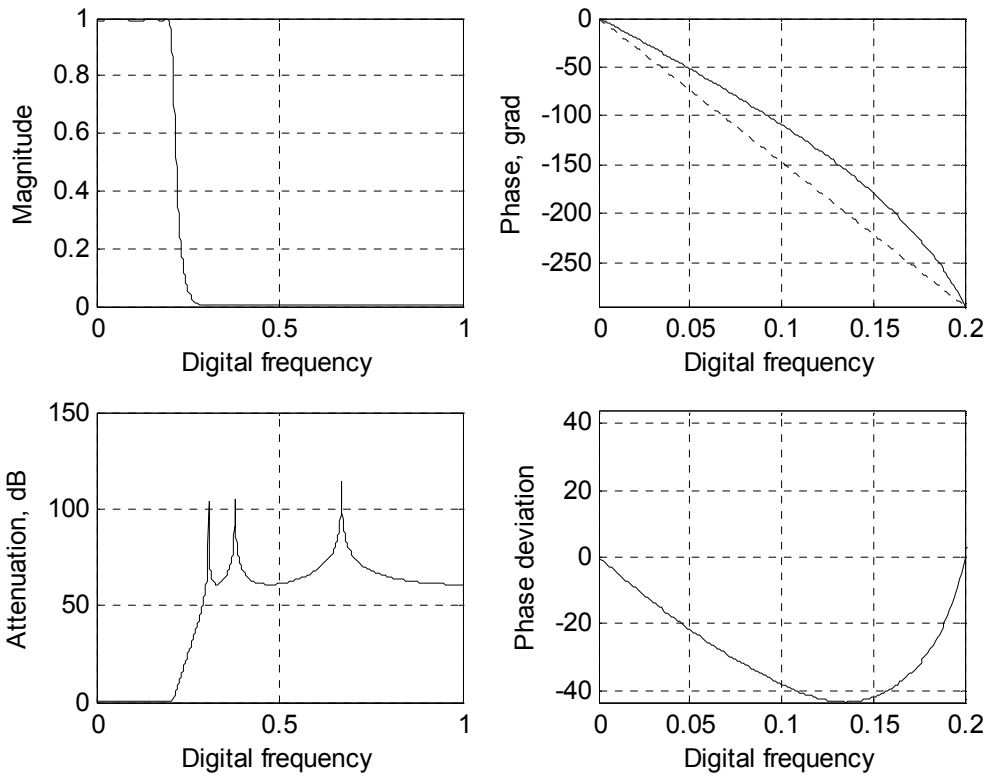

Fig. 35. *Frequency characteristics of elliptical filter without optimization*

The absence of analytical methods for designing super narrow-band digital filters with a linear phase forces to address to numerical methods of the decision. As the possible approach to phase linearization, instead of traditional transfer function (26) it is offered to use the modified function:

$$H(z^{-1}) = \prod_{i=1}^{N-1/2} \dot{h}_{oi} \frac{(k_1^{\,2} + A_i + \alpha_1 + j\beta_1) + 2(A_i - k_1^{\,2} + \alpha_2 + j\beta_2)z^{-1} + (k_1^{\,2} + A_i + \alpha_3 + j\beta_3)z^{-2}}{1 + 2\dot{h}_{oi}(C - k_1^{\,2} + \alpha_5 + j\beta_5)z^{-1} + \dot{h}_{oi}(k_1^{\,2} - Bk_1 + C + \alpha_6 + j\beta_6)z^{-2}}, \qquad (27)$$

where $\dot{h}_{oi} = h_{0i} + (\alpha_4 + j\beta_4)$, $k_1 = k + \alpha_7$.

The parameter k_1 defines the cut-off frequency of modified amplitude-frequency characteristic. It's possible to show, that at minimization of phase deviation in a passband the cut-off frequency increases.

All multipliers of modified biquad generally are complex. It complicates the realization; however there are approaches to the decision of this problem.

The analysis of the synthesized filter we shall lead as follows:

1. We shall weaken requirements to cut-off frequency, control frequency and passband attenuation of the modelled filter, keeping the order;
2. We shall set the requirement to the maximal deviation of a phase in a passband (at least, much less to traditional deviation);

3. Selecting coefficients in (27), we optimize a phase a numerical method (for example, Nelder-Mead), keeping the control above amplitude-frequency characteristic;
4. If the received maximal deviation of a phase in a passband does not meet the requirement, should set other initial approach and repeat the steps 3 and 4.

As a result of iterative optimization the following result is received: deviation of a phase in a passband - about 10^{-1}-10^{-2} grad. Thus the resulting mistake depends on rigidity of requirements to control frequency. Varying control frequency in allowable limits, it is possible to reduce considerably phase deviation in a passband.

The frequency characteristics after two iterations of global search are shown on Fig. 36.

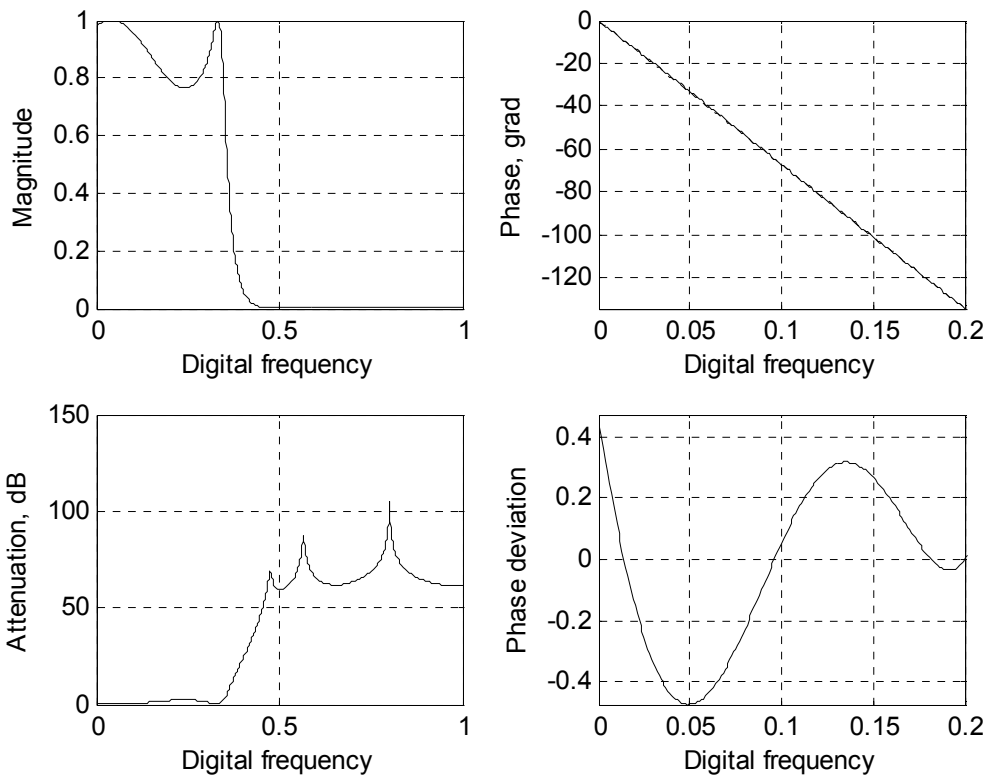

Fig. 36. *Frequency characteristics of synthesized filter with linearized phase-frequency response*

During linearization of the phase in the working band it is necessary to supervise required attenuation on the control frequency and higher. Thus cut-off frequency can be changed in limits in which safety of the order is guaranteed.

11.7 Synthesis of Duo-Channel Filtering Systems on Phase Units

One of the principal criteria during development of diagnostic systems is the ***system performance***. High performance of diagnostic system allows reducing of time necessary for decision-making during an estimation of the unit or aggregate condition. Especially actual it is in cases when the diagnosed object is temporarily taken out of service (for example, the WMB or the turbine of the plane's engine) and the forced idle time directly influences on operational costs. In this regards the

development of high-performance diagnostic systems is a relatively important problem.

The method of synthesis of duo-channel filtering systems on phase units will be considered below. The approaches for even and odd order are considered separately because of their peculiarities.

The class of the filters based on phase units is known to the modern practice of digital devices development. It is known that the module of AFR of any order phase unit has constant amplitude in the whole frequency range, equal to 1. The phase-frequency response (PFR) of a phase unit characterizes parameters of the block and regulates its frequency properties. It is possible to show that Butterworth, Chebyshev Type I and II and elliptic filters can be realized on phase structures not greater that of the second order.

In general the transfer function of the prototype of second order phase unit can be written as follows:

$$H(p)=\frac{p^2-Ap+B}{p^2+Ap+B}; \qquad H(z^{-1})=\frac{a_2+a_1z^{-1}+z^{-2}}{1+a_1z^{-1}+a_2z^{-2}}. \tag{28}$$

The block-diagram of one of optimum variants of realization of the phase unit, which transfer function is described by expression (28) is shown on Fig. 37.

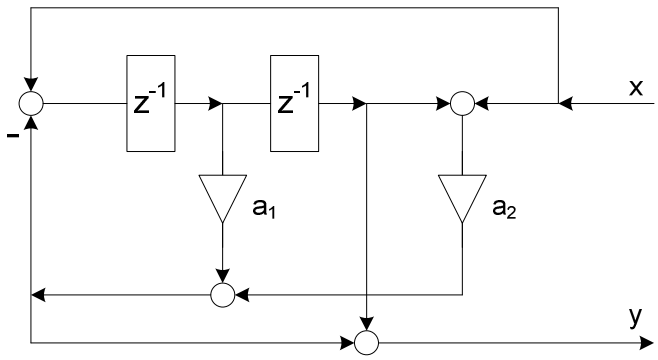

Fig. 37. *Structure of the 2nd-order phase unit*

It is known that the analogue polynomial prototypes of odd-order Butterworth and Chebyshev Type I filters belong to electrically-symmetrical circuits. Let us describe the half of this circuit using coefficients of its *A*-matrix:

$$\begin{bmatrix} a_{11} & a_{12} \\ a_{21} & a_{22} \end{bmatrix} \cdot \begin{bmatrix} a_{22} & a_{12} \\ a_{21} & a_{11} \end{bmatrix} = \begin{bmatrix} a_{11}a_{22}+a_{12}a_{21} & 2a_{11}a_{12} \\ 2a_{21}a_{22} & a_{21}a_{12}+a_{22}a_{11} \end{bmatrix}. \tag{29}$$

At elementary loads the transfer function of the circuit is:

$$H=\frac{1}{2(a_{11}a_{22}+a_{12}a_{21}+a_{11}a_{12}+a_{21}a_{22})}=\frac{1/2}{a_{11}(a_{22}+a_{12})+a_{21}(a_{12}+a_{22})}. \tag{30}$$

Taking into attention, that the determinant of *A*-matrix of stable circuit is 1, the transfer function expressed through factors of its *A*-matrix is:

$$H = \frac{1/2}{(a_{11}+a_{21})(a_{22}+a_{12})} = \frac{1}{4}\left(\frac{a_{11}-a_{21}}{a_{11}+a_{21}} + \frac{a_{22}-a_{12}}{a_{22}+a_{12}}\right). \tag{31}$$

It is possible to show that the factors of a-matrix standing on the main diagonal are polynomials of even degree of p, and the others – polynomials of odd degree of p. Hence, the transfer function described by expression (31), is the sum of two transfer functions of phase units.

$$H(p) = \frac{1}{2}\left(\frac{a-p}{a+p}\prod_{m=2}^{N-1}\frac{p^2 - A_m p + B_m}{p^2 + A_m p + B_m} \pm \prod_{n=1}^{N-2}\frac{p^2 - A_n p + B_n}{p^2 + A_n p + B_n}\right), \tag{32}$$

where n are the odd indexes, m are the even indexes.

The analog prototype which has a transfer function of expression (32) is a two-channel structure (Fig. 38). Each rectangle identifies a phase unit, and the number in it is a unit's order.

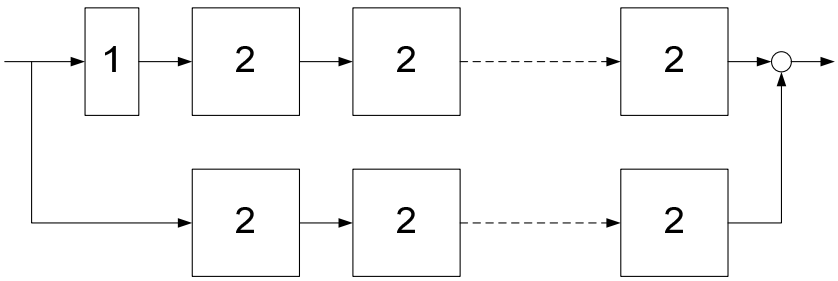

Fig. 38. *Structure scheme of synthesized odd-order circuit on phase units*

Unfortunately, the basic principle of the method described above does not allow its easy usage for similar synthesis of even-order two-channel filters on phase units, since its initial even-order *LC*-prototype is structural- and electrical asymmetric.

It is known that the physically realizable analogue polynomial prototypes of even-order Butterworth or Chebyshev type I filter with equal input and output loads belong to electrical-asymmetric circuits. The method of synthesis of ***duo-channel even-order circuit on phase units*** suggested below is based on artificial leading of structural- and electrical-asymmetric circuit (Fig. 39) to structural- and electrical-symmetric circuit. The subsequent known transformations of transfer function of modified circuit allow realizing it as a duo-channel system on phase units.

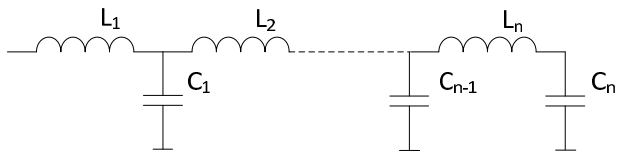

Fig. 39. *LC-prototype of electrical- and structural-asymmetric circuit*

The simplest reversible transformation of electrical-asymmetric circuit into electrical-symmetric circuit is based on a multiplication of *A*-matrix of the circuit by the complex *J*-matrix:

$$\begin{bmatrix} a_{11} & a_{12} \\ a_{21} & a_{22} \end{bmatrix} \cdot \begin{bmatrix} 0 & j \\ j & 0 \end{bmatrix} = j \begin{bmatrix} a_{12} & a_{11} \\ a_{22} & a_{21} \end{bmatrix}, \tag{33}$$

here the a_{12} is equal to a_{21}.

Since the only structural-symmetric circuit might be realized in the form of duo-channel phase system, it is necessary to modify the structure shown on Fig. 4.5 in the way as follows (Fig. 40):

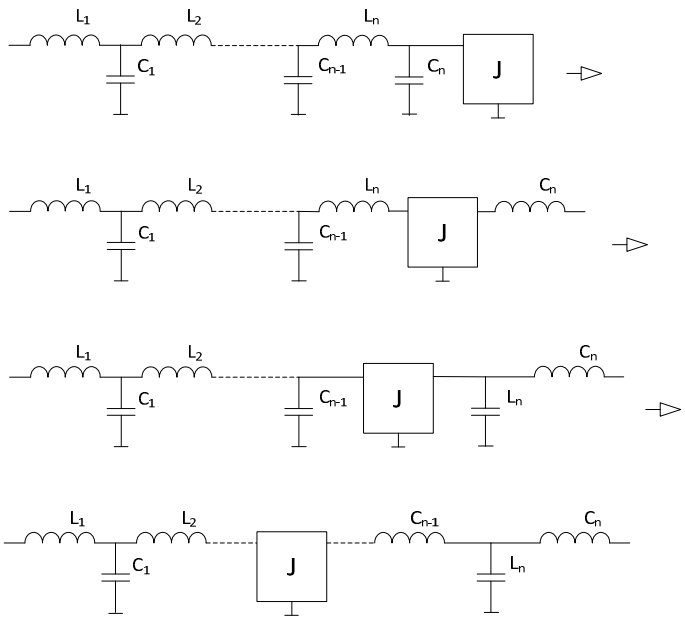

Fig. 40. *Transformation of the electrical-symmetric structural-asymmetric circuit into structural-symmetric*

Apparently, the normalized factors of such circuit (Fig. 40) are pair-equal for Butterworth or Chebyshev Type I filters, i.e. $L_1=C_n$, $C_1=L_n$, $L_2=C_{n-1}$ etc. Then, it is known, that the complex *J*-matrix might be realized by one of the two ways (Fig. 41):

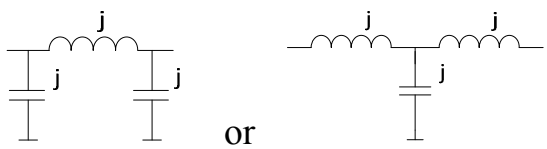

Fig. 41. *Variants of J-matrix realization*

For simplicity we will consider the electrical- and structural-asymmetric circuit of 4th-order (Fig. 42):

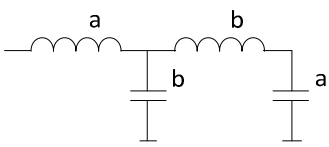

Fig. 42. *LC-prototype of asymmetric 4th-order circuit*

Here a and b are the parameters of the normalized circuit. According to Fig. 40 and Fig. 42, the modified structural-symmetric 4th-order circuit might be represented, for example, in the way as follows (Fig. 43):

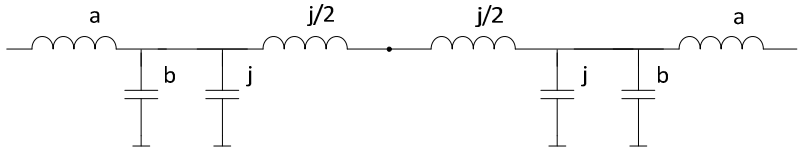

Fig. 43. *Structural-symmetric circuit with insertion of j-elements*

Let us describe the half of the circuit shown on Fig. 43 through factors of its A-matrix:

$$\lfloor A_{half} \rfloor =$$
$$= \begin{bmatrix} a_{11} & a_{12} \\ a_{21} & a_{22} \end{bmatrix} = \begin{bmatrix} 1 & pa \\ 0 & 1 \end{bmatrix} \begin{bmatrix} 1 & 0 \\ pb & 1 \end{bmatrix} \begin{bmatrix} 1 & 0 \\ j & 1 \end{bmatrix} \begin{bmatrix} 1 & j/2 \\ 0 & 1 \end{bmatrix} = \begin{bmatrix} 1+p^2ab & pa \\ pb & 1 \end{bmatrix} \begin{bmatrix} 1 & 0 \\ j & 1 \end{bmatrix} \begin{bmatrix} 1 & j/2 \\ 0 & 1 \end{bmatrix} =$$
$$= \begin{bmatrix} 1+p^2ab+jpa & pa \\ pb+j & 1 \end{bmatrix} \begin{bmatrix} 1 & j/2 \\ 0 & 1 \end{bmatrix} = \begin{bmatrix} 1+p^2ab+jpa & \frac{1}{2}(j+jp^2ab+pa) \\ pb+j & \frac{1}{2}(jpb+1) \end{bmatrix} \tag{34}$$

Hence for 4th-order filter:

$$H = \frac{1}{2}\left(\frac{a_{11}-a_{21}}{a_{11}+a_{21}} + \frac{a_{22}-a_{12}}{a_{22}+a_{12}} \right) =$$
$$= \frac{1}{2}\left(\frac{1+p^2ab+jpa-pb-j}{1+p^2ab+jpa+pb+j} + \frac{jpb+1-j-jp^2ab-pa}{jpb+1+j+jp^2ab+pa} \right) =$$
$$= \frac{1}{2}\left(\frac{p^2 - p\left(\frac{b-ja}{ab}\right) + \left(\frac{1-j}{ab}\right)}{p^2 + p\left(\frac{b+ja}{ab}\right) + \left(\frac{1+j}{ab}\right)} - \frac{p^2 - p\left(\frac{b+ja}{ab}\right) + \left(\frac{1+j}{ab}\right)}{p^2 + p\left(\frac{b-ja}{ab}\right) + \left(\frac{1-j}{ab}\right)} \right) \tag{35}$$

The module of the AFR of the considered duo-channel system is shown on Fig. 44.

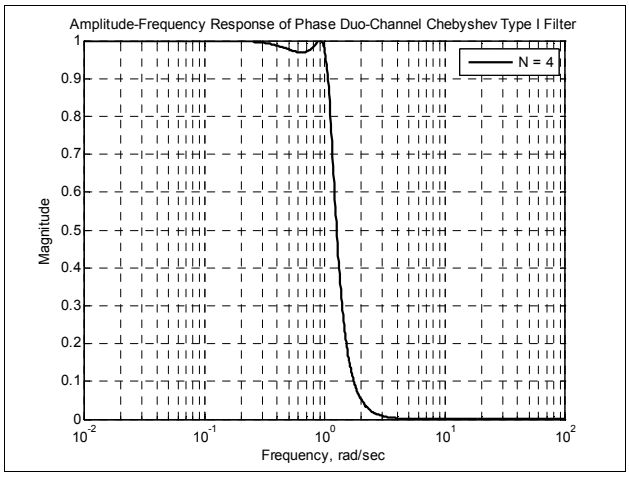

Fig. 44. *Module of AFR of LC 4th-order prototype*

Following the same pattern used for synthesis of low-frequency even-order filter with two phase channels, let us consider the synthesis of pass-band even-order duo-channel filter on phase units. The Fig. 42 might be easily transformed into a pass-band form as it is shown below (Fig. 45).

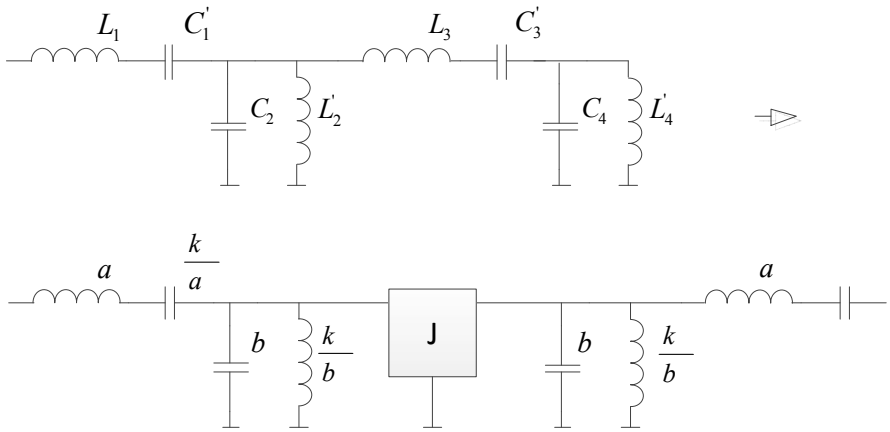

Fig. 45. *LC-prototype of 4th-order pass-band filter*

where $C_1' = \frac{1}{\omega_0^2 L_1}$, $L_1' = \frac{1}{\omega_0^2 C_1}$, ω_0 - central frequency, $k = \frac{1}{\omega_0^2}$. Changing the nominal of the capacitors and inductances with the normalized values, and following (34), (35), the half of the circuit, shown on Fig. 45 with the conjunction with the half of complex *J*-matrix can the described in the way as follows:

$$[A_{half}] = \begin{bmatrix} a_{11} & a_{12} \\ a_{21} & a_{22} \end{bmatrix} = \begin{bmatrix} 1 & pa \\ 0 & 1 \end{bmatrix} \begin{bmatrix} 1 & \frac{a}{pk} \\ 0 & 1 \end{bmatrix} \begin{bmatrix} 1 & 0 \\ pb & 1 \end{bmatrix} \begin{bmatrix} 1 & 0 \\ \frac{b}{pk} & 1 \end{bmatrix} \begin{bmatrix} 1 & 0 \\ j & 1 \end{bmatrix} \begin{bmatrix} 1 & j/2 \\ 0 & 1 \end{bmatrix} =$$

$$= \begin{bmatrix} 1 + \left(pa + \frac{a}{pk}\right)\left(pb + \frac{b}{pk}\right) + j\left(pa + \frac{a}{pk}\right) & \frac{1}{2}\left(j + j\left(pa + \frac{a}{pk}\right)\left(pb + \frac{b}{pk}\right) + \left(pa + \frac{a}{pk}\right)\right) \\ pb + \frac{b}{pk} + j & \frac{1}{2}\left(j\left(pb + \frac{b}{pk}\right) + 1\right) \end{bmatrix} \quad (36)$$

Following (30) and (36), the result transfer function of the pass-band 4th-order duo-channel phase filter might be described the way as follows (37):

$$H=\frac{1}{2}\left(\frac{a_{11}-a_{21}}{a_{11}+a_{21}}+\frac{a_{22}-a_{12}}{a_{22}+a_{12}}\right)=$$

$$=\frac{1}{2}\left(\frac{1+\left(pa+\frac{a}{pk}\right)\left(pb+\frac{b}{pk}\right)+j\left(pa+\frac{a}{pk}\right)-pb-\frac{b}{pk}-j}{1+\left(pa+\frac{a}{pk}\right)\left(pb+\frac{b}{pk}\right)+j\left(pa+\frac{a}{pk}\right)+pb+\frac{b}{pk}+j}+\right.$$

$$\left.+\frac{j\left(pb+\frac{b}{pk}\right)+1-j-j\left(pa+\frac{a}{pk}\right)\left(pb+\frac{b}{pk}\right)-\left(pa+\frac{a}{pk}\right)}{j\left(pb+\frac{b}{pk}\right)+1+j+j\left(pa+\frac{a}{pk}\right)\left(pb+\frac{b}{pk}\right)+\left(pa+\frac{a}{pk}\right)}\right) \tag{37}$$

Finally, we will show the amplitude-frequency responses of 4th-order filter with two phase channels. The *LC*-prototype structure and its normalized parameters are shown below (Fig. 46). The central frequency ω_0 is 3 rad/sec.

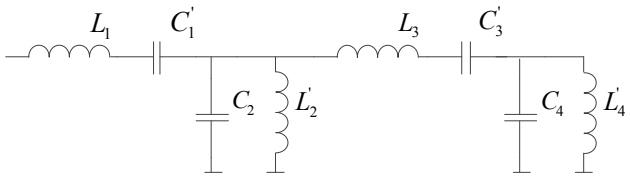

L_1 (a)	1.146	L_3 (b)	1.513
C_1'	0.097	C_3'	0.073
L_2'	0.073	L_4'	0.097
C_2 (b)	1.513	C_4 (a)	1.146

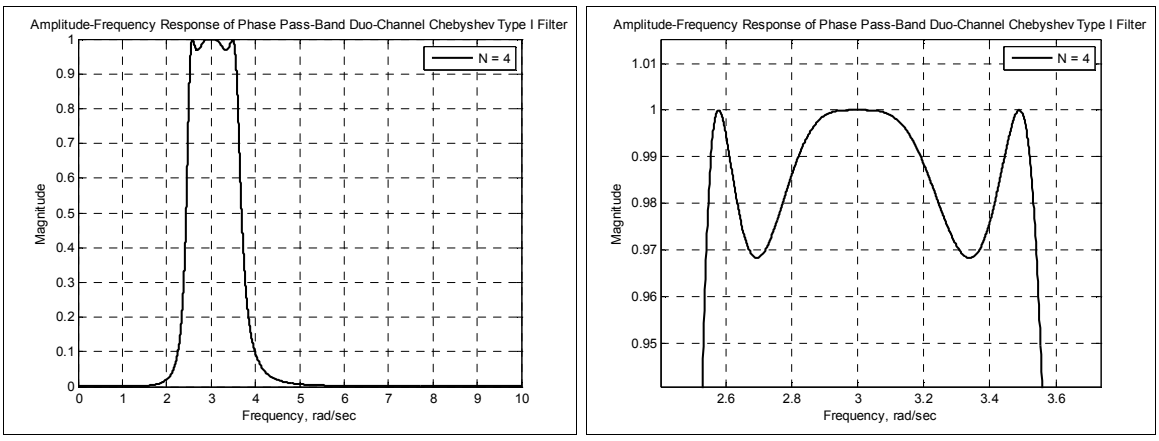

Fig. 46. *The module of amplitude-frequency response of the pass-band duo-channel Chebyshev type I 4th-order filter*

11.8 Identification of Discrete IIR-Systems Parameters

Identification of the biline structures parameters in real time and verification of their characteristics is extremely problematic. The traditional way of an estimation of dynamic frequency characteristics by the impulse response in this case is inconvenient because of its excessively big required length. It does not allow investigating frequency characteristics with necessary accuracy with the help of Fourier discrete transformation. The last causes practically unpredictable errors

because of insufficient precision of machine arithmetic and excessively big number of required arithmetic operations.

In Chapter the new technique of recursive systems identification is offered. It is based on synthesis of special finite input test influences, at which reaction of correctly designed filter has strictly limited duration.

As base, we shall consider a transfer function of the digital filter in Z-area:

$$H(z^{-1}) = \frac{Y(z^{-1})}{X(z^{-1})} = H_0 \frac{a_0 + a_1 z^{-1} + \ldots + a_N z^{-N}}{1 + b_1 z^{-1} + \ldots + b_N z^{-N}}, \tag{38}$$

and formulate the next statement:

Statement. ***For identification of any discrete N-order IIR-system it is always possible to generate an input influence with duration no more, than (N+1) samples, at which the finite length of output sequence is guaranteed.***

The proof. Really, the output response of any IIR-system of the finite order is:

$$Y(z^{-1}) = H(z^{-1}) \cdot X(z^{-1}) \cdot \tag{39}$$

If the product (39) is a polynomial of z^{-1}, it is enough, so that the reaction of such system would be of finite length. It is possible in a case when the factorization of the polynomial of input sequence $X(z^{-1})$ is realizable, and one of the factors is the polynomial $H(z^{-1})$ of transfer function denominator. At such input influence the Z-image of IIR-system reaction will be equal to product of finite length polynomials, one of which is a finite length numerator of transfer function.

For identification of the unknown system, having, in general, transfer function (38), generating of input unique sequence consists of samples selection of input influence, until output response becomes finite. After determination of both sequences a system's transfer function automatically becomes known. Then it is possible to calculate system frequency characteristics and to draw a conclusion about theirs compliance with goal requirements. As it has been shown above, such systems, in general, have transfer function as follows:

$$H(z^{-1}) = \prod_{i=1}^{N/2} \left(h_o \frac{b_{0i} - b_{1i} z^{-1}}{1 - \alpha_i z^{-1}} \cdot \frac{\overset{*}{b}_{0i} - \overset{*}{b}_{1i} z^{-1}}{1 - \overset{*}{\alpha}_i z^{-1}} \right). \tag{40}$$

For identification of this biline system it is expedient to form an input influence, which Z-transformation is equal to polynomials' product of denominators. In this case, while forming of input sequence the system's poles in Z-area (α_i) are selected.

Apparently from the expression (40), each part of the sum can be identified separately.

$$H(z^{-1}) = H_0^{'} \left(\sum_{k=1}^{N/2} \left(\frac{K_k z_k}{1 - z_k z^{-1}} + \frac{\overset{*}{K}_k \overset{*}{z}_k}{1 - \overset{*}{z}_k z^{-1}} \right) + 1 \right). \tag{41}$$

11.9 Verification of Discrete IIR-Systems Characteristics

The traditional way of an estimation of dynamic frequency characteristics by the impulse response (IR) is inconvenient in this case because of its excessively big demanded length. It does not allow investigating the frequency characteristics with necessary accuracy by means of fast Fourier transformation (FFT). In given Chapter the new method of quality check of recursive narrow-band systems' synthesis is offered. It's based on an estimation of a deviation degree of the real system impulse response from the ideal one. The question of a choice of necessary duration of the impulse response and criteria of its maximum deviation from ideal is being discussed.

According to a principle of uncertainty, the length of the impulse response which has the spectrum that meets the frequency requirements increases at reduction of the digital filter's cut-off frequency. For an acceptable calculation of amplitude-frequency response (AFR) values of the digital filter with a passband of the order $\tilde{\Omega}_1 = 1 \cdot 10^{-5}$ at least 4 million points of the impulse response are required.

According to a principle of uncertainty, the length of the impulse response which has the spectrum that meets the frequency requirements increases at reduction of the digital filter's cut-off frequency. For an acceptable calculation of amplitude-frequency response (AFR) values of the digital filter with a passband of the order $\tilde{\Omega}_1 = 1 \cdot 10^{-5}$ at least 4 million points of the impulse response are required. Therefore, the problems as of time as of machine realizability may come for evaluation of the AFR with the passband of $\tilde{\Omega} \approx 10^{-13} - 10^{-15}$. Moreover, very long "tail" part of the IIR during its processing by FFT can introduce practically unpredictable inaccuracy into the estimation of the dynamic frequency characteristics. This complex of problems forces to search for alternative solutions of the method of estimation of dynamic frequency characteristics of narrow-band digital filters.

Let us consider the following approach. For calculation of the ideal impulse response we can present the transfer function of biline filter without the first co-factor in the form of the sum of first-order transfer characteristics, using residues:

$$H(z^{-1}) = \frac{B(z^{-1})}{A(z^{-1})} = H_0 \prod_{i=1}^{N-1/2} \frac{(z_i - z^{-1})(\overset{*}{z}_i - z^{-1})}{(p_i - z^{-1})(\overset{*}{p}_i - z^{-1})} = \sum_{i=1}^{N/2} \left(\frac{K_i z_i}{p_i - z^{-1}} + \frac{\overset{*}{K}_i \overset{*}{z}_i}{\overset{*}{p}_i - z^{-1}} \right) + 1, \tag{42}$$

Then the nominators of the transfer functions of the bilines, that forms the last expression, can be defined the next way:

$$K_i z_i = \left. \frac{B(z^{-1})}{(p_i - \overset{*}{p}_i)} \right|_{z^{-1} = p_i} \quad \text{or} \quad K_i z_i = \frac{B(p_i)}{2 \cdot \mathrm{Im}(p_i)}. \tag{43}$$

It can be easily shown, that the impulse response of a separate digital unit (truncated biline), the transfer function of which is a part of the sum (42) is a power function:

$$y_i(n) = K_i \cdot z_i \cdot p_i^{-n} = \left[K'_i = K_i \cdot z_i\right] = K'_i \cdot p_i^{-n}, \qquad n = 1:\infty .$$

Then the general ideal impulse response of the system is described by the expression (44):

$$y(n) = \delta(0) - \sum_{i=1}^{N/2} (K'_i \cdot p_i^{-n} + \overset{*}{K'}_i \cdot \overset{*}{p}_i^{-n}) = \delta(0) - 2\sum_{i=1}^{N/2} \left(\left|K'_i\right| \left|p_i\right|^{-n} \cos\left(\arg(K'_i) + \arg(p_i) \cdot t\right)\right). \qquad (44)$$

For a quantitative estimation of the distinction degree of dynamic characteristics we shall define the following relation:

$$R = \frac{MSE}{E_{signal}},$$

where MSE is a root-mean-square value of the difference between real and ideal impulse responses; E_{signal} - is the energy of the ideal response.

It can be shown, that, in general, the coefficient R is decreased with the increasing of the length of estimated impulse response. Therefore, the increasing of the IR does not practically influence the quality of its estimation.

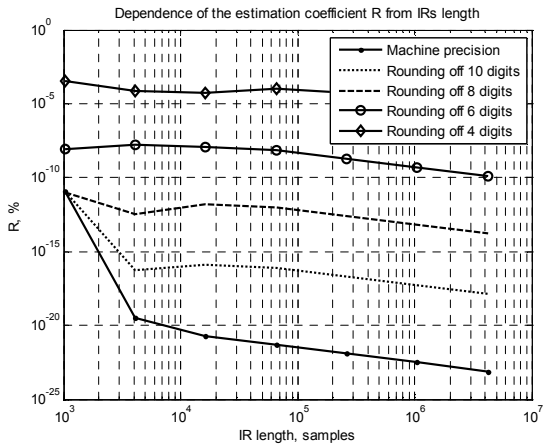

Fig. 47. *The dependencies of the estimation degree coefficient R from the duration of the real and analytical impulse responses*

11.10 Practical Application of the Research Results in the Vibrodiagnostics Process on the Railway

As it has already been mentioned above, the modeling of functioning of synthesized structures is desirable to spend subject to the limited word length of machine arithmetic. The used environment of modeling (Matlab) by default processes data with double precision (64 bits). However, in real situations the signal processors and microcontrollers used in practice have smaller word length of arithmetic – 32 or 16 bits, with the floating or fixed point. Therefore for the estimation of synthesis quality of structures offered in work we dwell on the data processing modeling with use of the maximum 32 bits.

The experimental data, used in research for validation of dynamic characteristics of synthesized structures and their comparison with known classical characteristics, are the numerical sequences received from the vibration sensors of WMBs. Data receiving and its subsequent registration in the form of text files have been carried with help of Yakobson P.P. (association VAST, Russia). Vibration signals used for modelling characterize various WMBs; the question of presence or absence of defects in diagnosed WMBs in the subsequent example isn't principal.

Example 1.

Let us qualitatively estimate the process of the real vibration signal processing by means of its filtering with the help of traditional biquad realization and realization only on bilines. We will set the requirements to the filter's frequency characteristics as well as to the word length of used machine arithmetic as follows:

- vibration signal duration: 80 s;
- number of samples in vibration signal: 8000;
- order of the filter, N: 14;
- normalized passband frequency: 0.1;
- passband ripple: 0.1 dB;
- control frequency: 0.101;
- word length of machine arithmetic: [32 20] bit (11 bits for integral part, 20 bits for fractional part).

The spectrums of the vibration signal processed by the filter on biquades and by the filter on bilines are shown on Fig. 48. It is easy to notice that at equal low requirements to AFR of filters bilines realization provides adequate transmission of the signal in a pass-band up to 0.1 of the normalized frequency, and almost full suppression of spectral components out of the pass-band. However, the realization on biquades does not provide required processing under the set criteria that allows speaking about advantage of bilines structures compared to biquades.

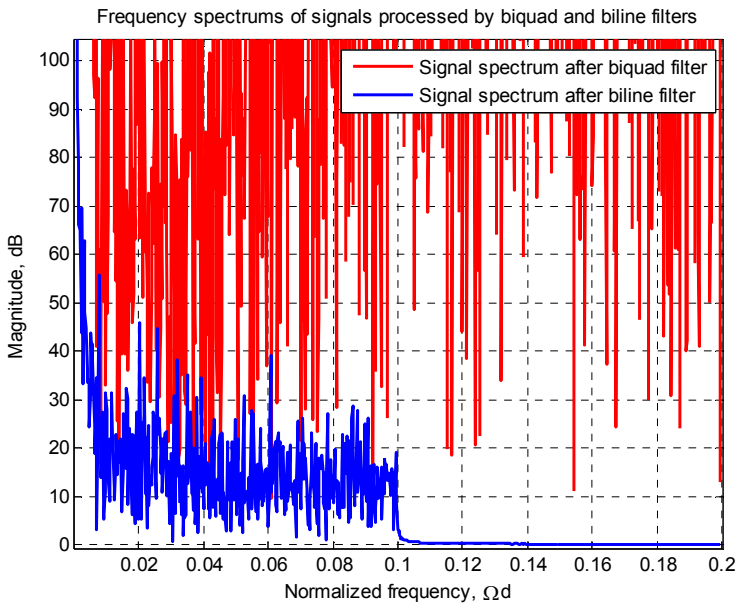

Fig. 48. *Spectrums of vibration signals, processed by the filter on biquades and filter on bilines*

As it has already been mentioned earlier, the considerable distortions of the frequency spectrum of the vibration signal, which has been passed through the filter on biquades, are explained by the presence of internal arithmetic overflows during real-time computations. It should be also noted, that even each of biquades has the normalization multiplier on its input (Fig. 8), it doesn't provide helpful scaling of the input signal to the values, at which the normal internal operations are guaranteed.

Example 2.

As it has already been mentioned earlier, the essence of the vibrodiagnostics process consists in search and selection of the frequency components, which characterize defects. Thus, one of problems of vibrodiagnostics consists in scanning of the frequency spectrum by means of the passband filter and further processing of the selected information. The certain technological complexity of the given action consists in the following: if experimental (knowledge) database of the certain sorts of defects is absent or poorly worked, there is a necessity for its groundworking by diagnosing of a great number of objects and comparison of the revealed defects with the certain changes in the frequency spectrums of vibration signals. The more exact and detailed diagnostics is required, the more precise the used digital filters should be.

Let us show the example of the vibration signal processing (received during diagnostics of WMB) by means of filter on bilines at limited word length of machine arithmetic. The frequency spectrum of the source signal is shown below:

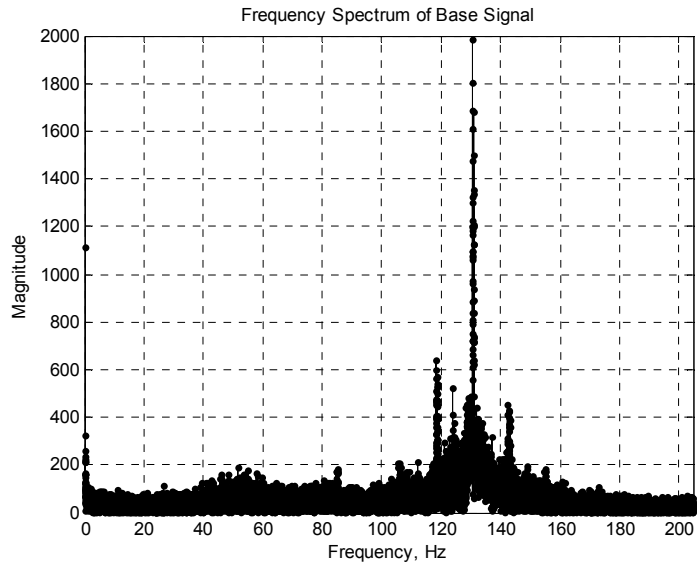

Fig. 49. *Frequency spectrum of the source signal*

The basic harmonic of the vibration signal is clearly visible on the frequency about 130 Hz (Fig. 49) as well as some lateral of the smaller level. In this case the basic harmonic characterizes the frequency of the wheel pair rotation, and lateral characterizes the combinational frequencies.

During smooth scanning of the frequency spectrum to the frequency of the basic harmonic of vibration signal by tuning of the passband filter on bilines the spectrum area with the frequency components expressed enough had been detected (Fig. 50). The nature of these components is unknown to the authors of given work; however the usefulness of result in this case is obvious: the certain harmonics in the vibration signal spectrum are found, while it is impossible to allocate them with traditional filters (here – with filters on biquades). The allocated harmonics of high level can be interpreted as presence of mechanical damages, local overheats, material heterogeneity inside the axis of wheel-motor block etc.

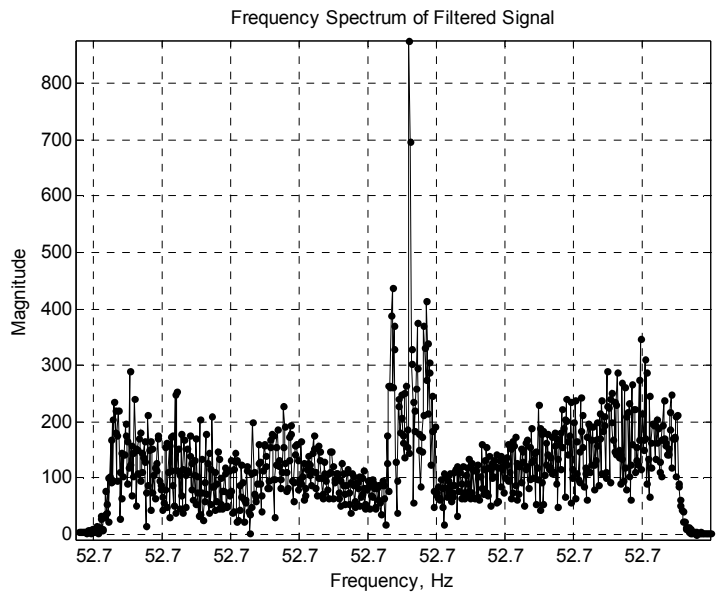

Fig. 50. *Part of the vibration signal spectrum, selected by the filter on bilines*

Thus, the new methods of a narrow-band filtration offer the precision tool for search and selection of hard-detective defects, which are characterized by rather narrow spectrum band. Having the sufficient experimental (knowledge) data about such defects, high-performance signal processors and algorithms of data processing, the application of biline realizations will allow finding out the poorly defined defects and, accordingly, raising the safety level of using of the aggregate or unit of the entire transport vehicle.

Nevertheless, the problem of high-performance scanning of the frequency spectrum of any kind of signals, including vibration signals, is still highly important. Large amount of data should be processed with the high precision in the minimum timeslot. Therefore the design and development of fast DSPs, which could use methods and algorithms described in the given research, are pretty significant.

Example 3.

Let us qualitatively compare the vibration signals spectrums, which are processed by the filter on biquades and filter on bilines correspondingly, at the other equal requirements to the frequency characteristics of the structures (Fig. 51). The main limitation in a given example, as well as in others, is a finite 32-bit length of machine arithmetic.

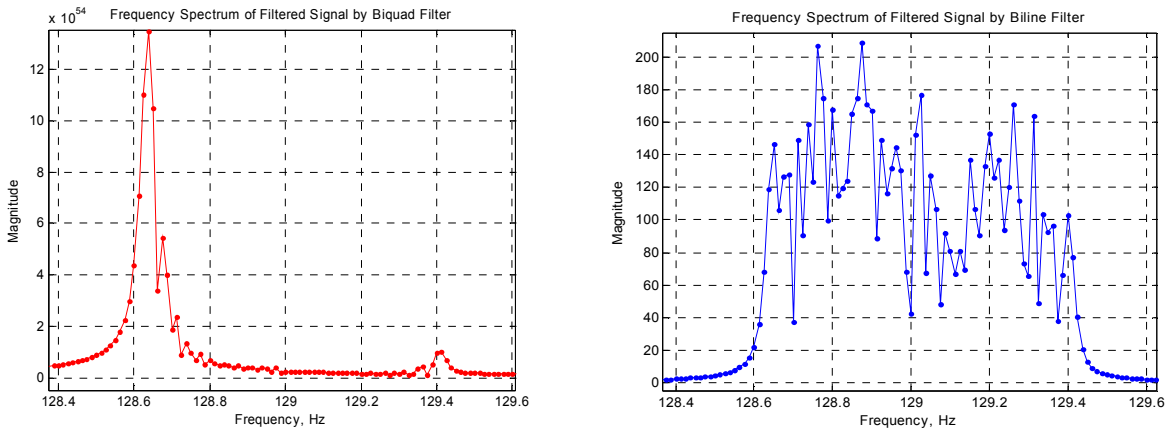

Fig. 51. *Spectrums of the vibration signals, which are processed by the filter on biquades and filter on bilines correspondingly*

It is simple to notice that the spectrum of the vibration signal, passed through realization on biquades, is considerably distorted. This happened because of considerable arithmetic overflows during the process of calculations. However, the filtration of the same signal by means of the filter on bilines has allowed keeping the level of the output signal at the expected limits and slightly distorts the passed harmonics.

CONCLUSIONS

The accomplished research principal results can be presented in the terms of the conclusion:

1) The main goal and tasks of the diagnostics process of aggregates and units of transport vehicles are defined. The vibrodiagnostics process as a one of methods of hardware-software diagnostics is examined. It have been revealed the problems of application of existing vibrodiagnostics methods for analysis of vibrational oscillation, which are generated by units and aggregates of different machines, in particular, transport vehicles. Among them: the practical impossibility of selection and division of relatively narrow spectral components in a spectrum of vibrodiagnostics signal; complexity of designing inexpensive high-performance vibrational analyzers.
2) For improvement of quality of vibration diagnostics of transport vehicles, related units and aggregates it is suggested to use the new developed algorithms and structures of comparatively narrow-band and/or high-selective filtration;
3) The 1st-order substructures – bilines of the common form and phase bilines are suggested for synthesis of high-selective and/or narrow-band digital filters. The following characteristics of biline realizations, which are still unattainable today by the traditional realizations, have been achieved:
    - The critical passband widths of biline digital filters are some orders lower (6-8) than the passbands of traditional biquad realizations. It's explained that the biline realizations are less sensitive to the finite precision of machine arithmetic rather than traditional ones;
    - The maximum practically realizable steepness (selectivity) of amplitude-frequency responses of biline realizations are much times greater than the one of biquadratic realizations;
    - The maximum realizable order of the bilines realizations is unachievable by the traditional biquad or other kind structures;
    - In definite situations the implementation of narrow-band filtration relatively short machine arithmetic is only possible with use of biline structures;
    - Existence of the only multiplier in 1st-order phase circuit allows increasing the speed of response of tuning their frequency characteristics.
4) For increasing of performance of the entire vibrodiagnostics system and reducing the time for decision-making the new algorithms of building of digital high-selective duo-channel phase filters using phase and quazi-phase bilines is suggested. These filters also possess high robustness and structural efficiency, as the common-type biline structures;
5) The statement that realization of passband and stopband filters is only possible with use of "biquadratic cells» (biquades) is disproved. The principal possibility

of synthesis of narrow-band and/or high-selective passband and stopband filtration systems on bilines is provided;

6) The peculiarity of biline realization of any type involves the complication of systems' parameters identification, and also the practical impossibility of frequency responses verifications. In this regards the methods of verification and parameters identification of such systems were offered;
7) The machine modeling of bilines and biline realizations at different machine arithmetic confirmed the outstanding advantages of bilines in cases when the high-speed and safe signal processing is required at the conditions of rigid requirements to the system's characteristics.
8) To imperfections of biline realizations we may refer the existence of, in general, complex multipliers, that leads to the increasing of amount of real multipliers. However the suggested bilines with real multipliers do not yield to bilines with complex multipliers, obtained above, under other equal conditions. Moreover, in some cases it's more advantageous to use the simplified biline structures, rather than corresponding biquad structures under other equal requirements;
9) It has been demonstrated, that the systems on bilines allow correct and valid filtration of the vibration signals of wheel-motor blocks, while the existing traditional realizations don't. To maximally simulate the real digital signal processors environment the 32-bit machine arithmetic with fixed point has been chosen for real-time modelling of traditional and new realizations.

LIST OF THE AUTHOR'S PUBLISHED PAPERS

1. Еремеев В., Гуменюк А., Мамиров Т. Новые структуры малочувствительных цифровых фильтров. In: *Computer Modeling and New Technologies*, Volume 5, No. 1, ISSN 1407-5806, ISSN 1407-5814 (2001), p. 132-137.
2. Мамиров Т. Оптимальные реализации цифровых фазовых звеньев с комплексными умножителями. In: *Programme and Abstracts of the International Conference „Reliability and Statistics in Transportation and Communication"* (RelStat'02), Transport and Telecommunication Institute, 17-18 October 2002, Riga, Latvia, ISBN 9984-668-42-8, p.81.
3. Мамиров Т. Исследование возможностей высокоизбирательных цифровых фазовых фильтров. In: *Programme and Abstracts of the Research and Academic Conference „Research and Technology – Step into the Future",* Transport and Telecommunication Institute, 7-11 April 2003, Riga, Latvia, ISBN 9984-668-51-7, p.85.
4. Мамиров Т. Цифровые фазовые звенья с комплексными умножителями. In: *Transport and Telecommunication*, Volume 4, No.1, ISSN 1407-6160 (2003), c. 34-38.
5. Мамиров Т. Phase Filters with High Linearity of PFC. In: *Programme and Abstracts of the International Conference „Reliability and Statistics in Transportation and Communication"* (RelStat'03), Transport and Telecommunication Institute, 16-17 October 2003, Riga, Latvia, ISBN 9984-668-59-2, p. 98.
6. Mamirov T. High-Selective Digital Filters with Optimized Linearity of Phase Characteristic. In: Proceedings of the *International Conference "Reliability and Statistics in Transportation and Communication"* (RelStat'03), ISBN 9984-668-65-7 (2004), p. 215-217.
7. Mamirov T. Estimation of Frequency Characteristics of Supernarrow-Band Filters. In: *Programme and Abstracts of the International Conference „Reliability and Statistics in Transportation and Communication"* (RelStat'04), Transport and Telecommunication Institute, 14-15 October 2004, Riga, Latvia, ISBN 9984-668-76-2, p. 95.
8. Yeremeyev V., Mamirov T. Characteristics' Identification of Narrow-Band Discrete Systems. In: *Programme and Abstracts of the International Conference „Reliability and Statistics in Transportation and Communication"* (RelStat'04), Transport and Telecommunication Institute, 14-15 October 2004, Riga, Latvia, ISBN 9984-668-76-2, p. 90.
9. Yeremeyev V., Mamirov T. Synthesis of Computational-Effective Structures of Digital Filters. In: *Abstracts of the 5th International Conference "Reliability and Statistics in Transportation and Communication"* (RelStat'05), 2005, Riga, Latvia, p.18.

10. Mamirov T. Identification and Search of Way of Problem Decision Using Standard Methods for Training of Specialists in Transport Area. In: Proceedings of the *International Conference "Innovative Vocational Education and Training in the Transport Area"* (IVETTA), ISBN 9984-9820-0-9 (2005), p. 309-317.
11. Yeremeyev V., Mamirov T. Identification of Narrow-Band Discrete Systems. In: *Transport and Telecommunication*, Volume 6, No. 2, ISSN 1407-6160 (2005), p. 255-259.
12. Yeremeyev V., Mamirov T. Synthesis of Computational-Effective Structures of Digital Filters. In: *Transport and Telecommunication*, Volume 7, No. 4, ISSN 1407-6179 (2006), p. 4-14.
13. Mamirov T. The Analysis, Synthesis and Modelling Of Robust Narrow-Band Filtration Systems. In: *RelStat'06 Proceedings*, ISBN 9984-9865-9-4 (2006), pp. 305-309.
14. Yeremeyev V., Mamirov T. Research of Characteristics of Robust Tunable Supernarrow-Band Filtration Systems. In: *RelStat'06 Proceedings*, ISBN 9984-9865-9-4 (2006), pp. 302-304.
15. Mamirov T. Estimation of Frequency Characteristics of Super-Narrow Band Digital Filters. In: *Electronics and Electrical Engineering*. ISSN 1392–1215, No. 5 (77), Kaunas, 2007, p. 69-72.
16. Mamirov T. Synthesis of Even-Order Phase Filters. In: *Abstracts of the 10th International Conference "Reliability and Statistics in Transportation and Communication"* (RelStat'10), 20–23 October 2010, Riga, Latvia, ISBN 978-9984-818-35-1, p. 72.
17. Mamirov T. Synthesis of Duo-Channel Even-Order Phase Filters. In: *Proceedings of the 10th International Conference "Reliability and Statistics in Transportation and Communication"* (RelStat'10), 20–23 October 2010, Riga, Latvia, ISBN 978-9984-818-34-4, p. 368-373.
18. Mamirov T. Synthesis of Two-Channel Even-Order Filtering Systems on Phase Units. In: *Transport and Telecommunication*, 2010, Volume 11, No. 3, ISSN 1407-6160, ISSN 1407-6179, p. 37-44.