Proceedings of the 10th International Conference "Reliability and Statistics in Transportation and Communication" (RelStat'10), 20–23 October 2010, Riga, Latvia, p. 131-135. ISBN 978-9984-818-34-4
Transport and Telecommunication Institute, Lomonosova 1, LV-1019, Riga, Latvia

POSSIBILITIES OF MMPP PROCESSES FOR BURSTY TRAFFIC ANALYSIS

Jelena Revzina

Transport and Telecommunication Institute
Lomonosova 1, Riga, LV-1019, Latvia
Ph.: (+371) 26370174. E-mail: lena_revzina@tsi.lv

Modern telecommunication networks are designed to support converged traffic including voice, data and video. [1] One major feature of these networks is that the input traffic is usually highly bursty.[2] Also, because these networks operate in a packet switching mode, there is usually a strong correlation between packet arrivals. Thus, for these networks the traditional Poisson traffic model cannot be applied because the presence of correlation between traffic arrivals violates the independence assumption associated with the Poisson processes.

In this paper we consider the opportunities using of MMPP processes for the modelling of such traffic.

Keywords: *Markov modulated Poisson process, anomalous events, bursty traffic*

1. Introduction

The modern sensor and storage technologies allow us to record and save increasingly detailed pictures of human behaviour. Examples include logs of user navigation and search on the Internet, RFID traces, security video archives, and loop sensor records of freeway traffic. These time-series often reflect the underlying hourly, daily, and weekly rhythms of natural human activity. At the same time, the time-series are often corrupted by events corresponding to bursty periods of unusual behaviour. Examples include anomalous bursts of activity on a network, large occasional meetings in a building, traffic accidents. [3]

Markov modulated Poisson processes (MMPP), that are a subclass of the doubly stochastic Poisson processes described by J.Grandell (1976), can be used to model time-varying arrival rates and important correlations between interarrival times. Despite these abilities MMPPs are still tractable by analytical methods. [4]

MMPPs are most frequently seen in queuing theory, but it has some interesting applications. For example, the MMPPs are used by S.L.Scott and P.Smyth (2003) for analysis of Web surfing behaviour and S.L.Scott (2002) for telephone network fraud detection [5].

In this paper we describe the potentialities of MMPPs to represent correlated streams and bursty traffic. The model using MMPP is constructed. The numerical results are received and analysed; the conclusions are drawn. The prospects of application of model using MMPP for such problems are estimated.

2. Related Works

The Markov modulated Poisson process (MMPP) is a doubly stochastic Poisson process (Cox1955; Gutierrez-Pena and Nieto-Barajas 2003) whose rate varies according to a Markov process.

TheMMPP is most frequently seen in queuing theory (Du 1995; Olivier and Walrand 1994) but it has other interesting applications. Davison and Ramesh (1996) applied a discretized MMPP to a binary time series of precipitation data by numerically optimising the discretized MMPP likelihood. Scott (1998) used the MMPP to model criminal intrusions on a telephone network. Other uses of the MMPP exist in environmental, medical, industrial, and sociological research.

Inference for MMPP parameters has received little attention because most applications of the MMPP assume known model parameters. Turin (1996) proposed an EM (Expectation Maximization) algorithm for finding maximum likelihood estimates of MMPP parameters. Scott(1999) provided a Bayesian method for inferring the parameters of a stationary two state MMPP. Scott and Smyth (2003) extend Scott (1999) to the nonstationary case with an arbitrary number of states. They show how the

MMPP can be viewed as a superposition of latent Poisson processes, which in turn may be expressed as a nonhomogeneous, discretely indexed hidden Markov model (HMM) by partitioning time into intervals between observed events. Expressing the MMPP as an HMM allows one to probabilistically reconstruct the latent Markov and Poisson processes using a set of forward backward recursions.

3. Markov Modulated Poisson Processes Concepts

Markov modulated Poisson processes are the subclass of the doubly stochastic Poisson (or Cox) processes. The MMPPs can be used to model time-varying arrival rates and important correlations between interarrival times. Despite these abilities MMPPs are still tractable by analytical methods.

The current arrival rate λ_i, $0 \le i \le m$, of an MMPP is defined by the current state *i* of an underlying CTMC (continuous time Markov chain) with *m+1* states. The counting process of an MMPP is given by the bivariate process $\{(J(t), N(t)) : t \in T\}$, where *N*(*t*) is the number of arrivals within a certain time interval [0, *t*), $t \in T$, and $0 \le J(t) \le m$ is the state of the underlying CTMC. If we consider $Q_{MMPP} = [q_{ij}], 0 \le i \le m, 0 \le j \le m$, being the infinitesimal generator matrix of the underlying CTMC, then the rates of the transitions between the states of the CTMC are given by the nondiagonal elements of Q_{MMPP}. For determining the unconditional state probabilities resolves to a system of linear equations, that in vector-matrix form as follows:

$$0 = \pi Q, \tag{1}$$

where the matrix $Q = [q_{ij}], \forall i, j \in S$, contain the transition rates q_{ij} from any state *i* to any other state *j*, where $i \ne j$, of a given continuous-time Markov chain.

The strictly positive steady-state probabilities can be gained by the unique solution of (1), when an additional normalization condition is imposed:

$$\pi 1 = \sum_{i \in S} \pi_i = 1, \tag{2}$$

where is the unit vector.

Assuming the underlying CTMC is homogeneous then its steady-state probability vector π_{MMPP} follows from (1) and (2).

If the arrival rates λ_i, $0 \le i \le m$, are collected in an arrival rate vector $\lambda = (\lambda_0, \lambda_1, ..., \lambda_m)$ the mean steady-state arrival rate generated by the MMPP is

$$\overline{\lambda} = \pi_{MMPP} \lambda^T. \tag{3}$$

Special cases of the MMPP are the switched Poisson process (SPP), which is a two-state MMPP, and the interrupted Poisson process (IPP), which is an SPP with one of the arrival rates being zero.

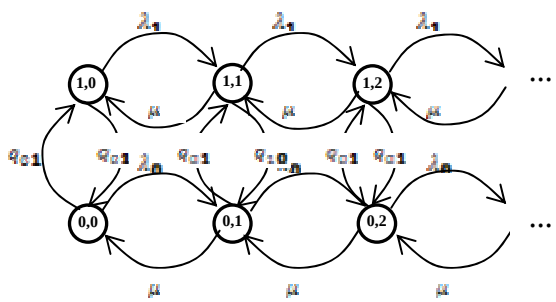

Figure 1. State transition diagram of an MMPP/M/1queue with two-state MMPP

Consider a queueing system with a two-state MMPP arrival process with arrival rates λ_0, λ_1 and constant service rate μ. The corresponding state transition diagram is shown on Figure 1. A possible generalized stochastic Petri net (GSPN) specifying such a state transition diagram is shown on Figure 2.

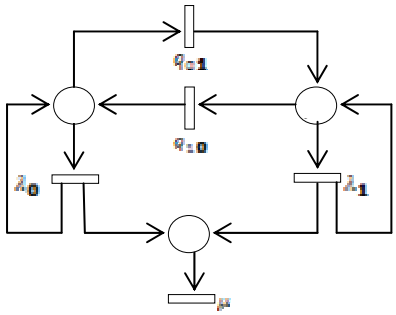

Figure 2. Generalized stochastic Petri net of an MMPP/M/1 queue with two-state MMPP

All transitions in this GSPN have exponentially distributes firing times and are denoted with their respective firing rate. Alternative and more compact representations could be constructed by using stochastic reward nets or by the introduction of inhibitor arcs.

To calculate the steady-state probability that the queueing system is empty, we use the following equation from GI/M/1 queue, with $\rho = \frac{\overline{\lambda}}{\mu}$:

$$\pi_k = \rho(1-\sigma)\sigma^{k-1}, k > 0,$$

$$\pi_0 = 1-\rho. \tag{5}$$

Therefore,

$$\pi_0 = 1-\frac{\overline{\lambda}}{\mu}. \tag{6}$$

Unfortunately, the steady-state probabilities of the MMPP/M/1 queue, where there are one or more jobs in the system, cannot be derived so easily. A possible way for calculation arises from the fact that the state transition diagram of Figure 2 is skip-free to the left and right and therefore constitutes a quasi-birth-death (QBD) process. QBDs can be evaluates using the matrix-geometric method (Bolch, Greiner, de Meer andTrivedi, 2006).

The generator matrix of the underlying two-state CTMC of the MMPP is

$$Q_{MMPP} = \begin{pmatrix} -q_{01} & q_{01} \\ q_{10} & -q_{10} \end{pmatrix}. \tag{7}$$

The steady-state probabilities $\pi_{MMPP,0}, \pi_{MMPP,1}$ of the underlying CTMC are then given by

$$\pi_{MMPP,0} = \frac{q_{10}}{q_{01}+q_{10}}, \tag{8}$$

$$\pi_{MMPP,1} = \frac{q_{01}}{q_{01}+q_{10}}. \tag{9}$$

According to the formulae (3), (7) and (8), $\overline{\lambda}$ can be calculated using:

$$\overline{\lambda} = \pi_{MMPP}\lambda^T = \pi_{MMPP,0}\lambda_0 + \pi_{MMPP,1}\lambda_1 = \frac{q_{10}\lambda_0 + q_{01}\lambda_1}{q_{01}+q_{10}}. \tag{10}$$

Finally, utilizing formulae (6) and (10) the steady-state probability that the queueing system is empty can be calculated:

$$\pi_0 = 1-\frac{q_{10}\lambda_0 + q_{01}\lambda_1}{(q_{01}+q_{10})\mu}. \tag{11}$$

4. The Practical Example of MMPP

In this section of paper is presented a CTMC modelling a simplified version of an ISDN channel. (K.S. Trivedi)The heterogeneous data are transported across an ISDN channel. And discrete and continuous media are served at the same time, despite the fact that different QoS requirements are committed by different types of media on the transport system. It is well known that voice data is very sensitive to delay and jitter effects. Therefore, guarantees must be given for a maximum end-to-end delay bound as far as voice data is concerned. On the other hand, continuous media streams such as far as voice can tolerate some fraction of data loss without suffering from perceivable quality degradation. Discrete data, in contrast, are very loss sensitive but require only weak constraints as far as delay is concerned. Trade-off analysis is therefore necessary to make effective use of limited available channel bandwidth.

In given scenario, a single buffer scheme is assumed that is shared between a voice stream and discrete data units. For simplicity, the delay budget available for voice packets to be spent at the channel is assumed to be just enough for a voice data unit transmission. Any queueing delay would lead to a violation of the given delay guarantee. And so, voice packets arriving at a nonempty system are simply rejected and discarded. Rejecting voice data, on the other hand, is expected to have a positive impact on the loss rate of data packets due to sharing of limited buffer resources. Of course, the question arises to what extent the voice data loss must be tolerated under the given scenario.

We use the MMPPs to represent correlated arrival streams and bursty traffic more precisely. The arrival rate of an MMPP is assumed to be modulated according to an independent CTMC. The GSPN model has two-state MMPP data arrivals as shown on Figure 3.

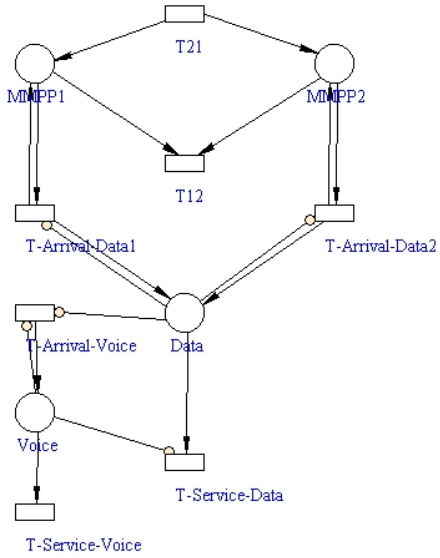

Figure 3. A GSPN including an MMPP modulating data packet arrival rates

A token moves between the two places $MMPP_1$ and $MMPP_2$. When transition $T_{arrival-data1}$ is enabled and there are fewer than k packets transmitted across the channel, then discrete data is arriving with rate λ_{21}. Alternatively, the arrival rate is given by λ_{22}. If λ_{21} differs significantly from λ_{22}, bursty arrivals can be modelled this way. Note that the MMPP process is governed by firing rates of T_{21} and T_{12}, which are given by rates a and b, respectively.

The parameters to the MMPP-based ISDN model we can see in the Table 1.

Table 1. Input parameters of the MMPP-based model

Parameter	Value
λ_1	1.0
λ_{22}	9.615
λ_{21}	0.09615
μ_1	5.0
μ_2	10.0
a	8.0
b	2.0
k	10

The rejection probabilities received as a result of modelling, are presented on Figure 4.

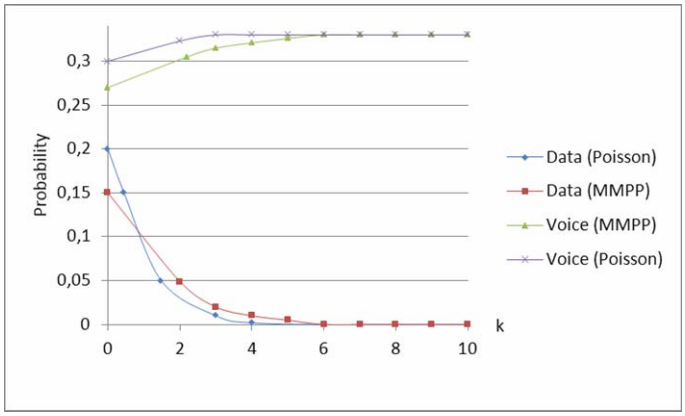

Figure 4. Rejection probabilities as a function of channel capacity *k*: Poisson and MMPP

5. Conclusions

The given results in Figure 4 indicate that for small buffer sizes a Poisson traffic model assumption leads to more pessimistic rejection probability than those based on MMPP assumptions.

This effect is quickly reversed for discrete data if channel capacity is increased. For larger capacities there is hardly any difference in rejection probability for voice data, regardless of Poisson or MMPP type traffic model.

In general, though, correlated or bursty traffic can make a significant difference in performance measures as opposed to merely Poisson type traffic. But modelling methods based on GSPN (K.S. Trivedi), which allow us to compactly specify and automatically generated and solve large CTMC for steady-state and transient behaviour, are capable of handling such non-Poisson traffic scenarios.

Thus, we describe how the model can be used to investigate correlated arrival stream and bursty traffic behaviour. The results indicate that the Markov modulated Poisson processes provide ineffective framework for representing of the unusual bursty events.

References

1. Guizani, M., Rayes, A., Khan, B., Al-Fuqaha, A. *Network Modeling and Simulation. A practical Perspective*. JohnWiley&Sons, 2010. 271 p.
2. Ibe, Oliver C. *Markov Processes for Stochastic Modeling.* Academic Press, 2009. 490 p.
3. Ihler, A., Hutchins, J., Smyth, P. *Learning to Detect Events with Markov-Modulated Poisson Processes.* ACM Trans. Knowl. Discov. Data 1, 3, Article 13 (December 2007).
4. Bolch, G., Greiner, S., de Meer, H., Trivedi, K.S. *Queueing Networks and Markov Chains: Modeling and Performance Evaluation with Computer Science Applications.* JohnWiley&Sons, 2006. 878 p.
5. Scott, S.L., Smyth, P. The Markov Modulated Poisson Process and Markov Poisson Cascade with Applications to Web Traffic Modeling. Bayesian Statistics 7. *Oxford University Press*, 2003.